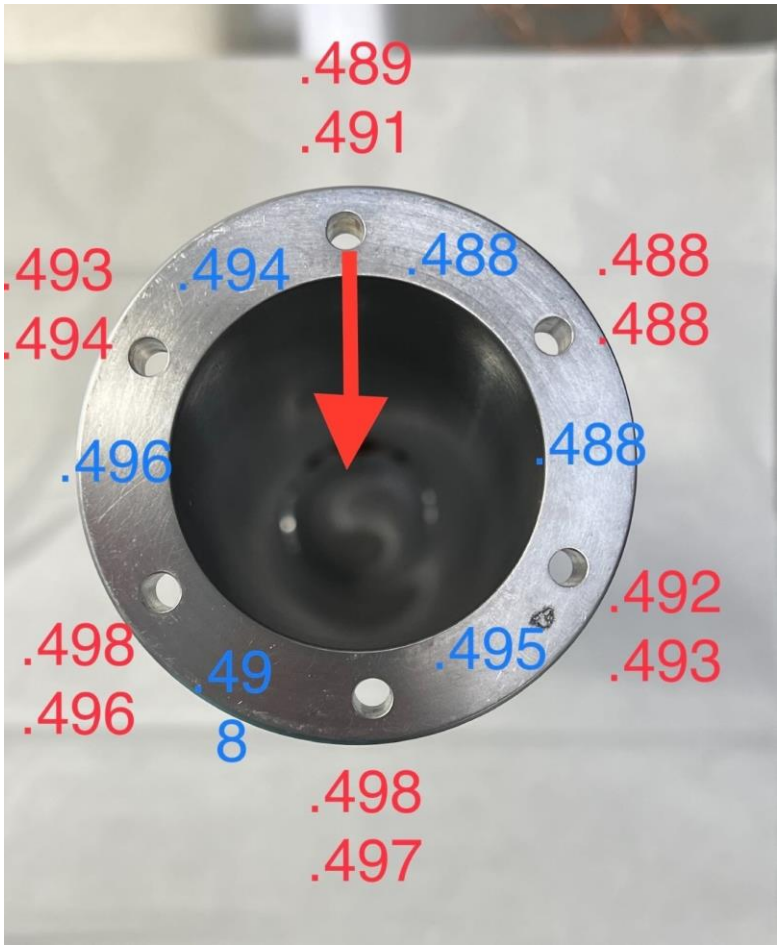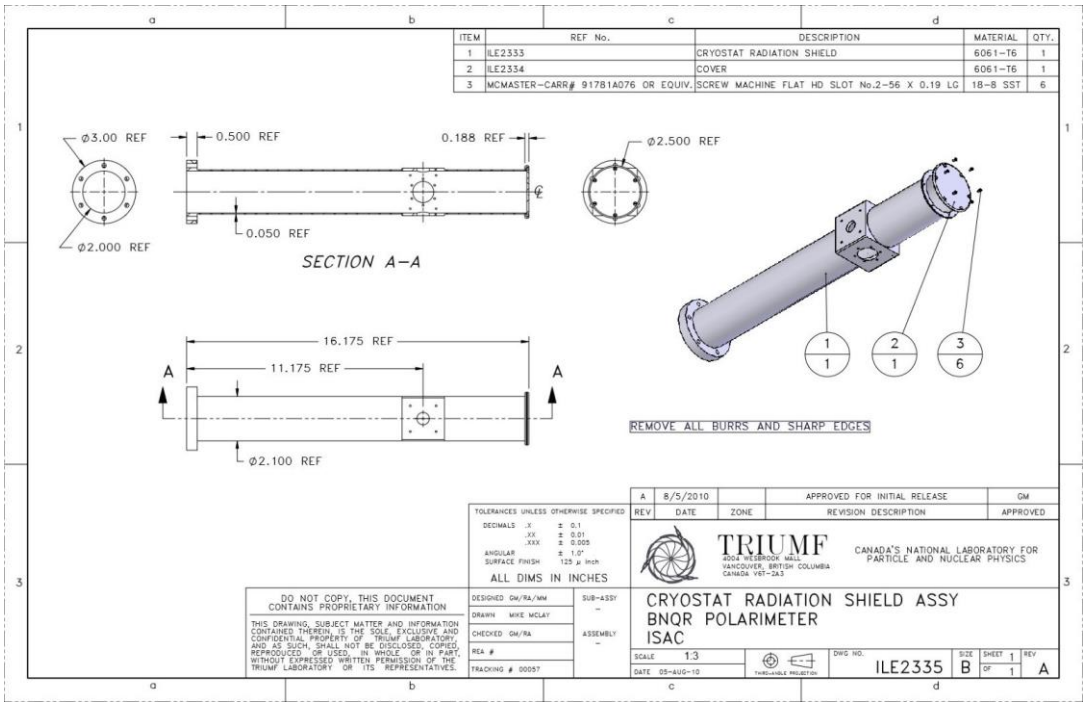Version one shield with “0” on the beam entering side:
(Ver1.0 drawing: ILE2335)