MODEL 400 TL COMPLETE DILUTION REFRIGERATOR INSTRUCTION MANUAL

Supplied to : Triumf
4004 Wesbrook Mall
UBC Campus
Vancouver
Canada V6T 2A3

Project No : 28677

OXFORD INSTRUMENTS LIMITED
OSNEY MEAD
OXFORD
OX2 ODX
ENGLAND

TELEPHONE : (0865) 241456
TELEX : 83413
CABLE : HELIUM OXFORD

July, 1987

28677SC.VWF

CONTENTS

Section 1

INTRODUCTION

The helium-3/helium-4 dilution refrigerator first proposed by London (1951) has now become a standard laboratory instrument for producing ultra-low temperatures for a variety of research purposes. While the number of scientists interested in the thermo-dynamics of attaining these low temperatures is decreasing, more and more scientists are interested in experimenting at these temperatures. The aim of Oxford Instruments is to provide Dilution Refrigerators for these users by producing a reliable and comparatively simple system which works with the minimum amount of expert knowledge and associated 'black magic' still connected with these instruments.

The present manual contains however a short description of the theory of operation of a dilution refrigerator which will enable the user to gain a fuller understanding of the working and operation of his system. This might also be useful during fault diagnosis when the system, for one reason or another, does not reach the specified temperatures.

The present design of this refrigerator takes into account several years of practical experience and development. The system is now as reliable as present day technology permits. We at Oxford Instruments hope you will be entirely satisfied with both the performance and reliability of the refrigerator and wish you prolonged and successful operation.

Section 2

Principle of Operation

The principle of operation of the dilution refrigerator was originally proposed by H. London in 1951, but the first working systems were not built until more than ten years later. Since that time, the performances of these systems have steadily improved, and the physical processes involved have become much better understood.

When a mixture of the two isotopes of helium is cooled below a critical temperature, it separates into two phases. The higher "concentrated phase" is rich in helium-3 and the heavier "dilute phase" is rich in helium-4. The concentration of helium-3 in each phase is dependent upon the temperature as shown in figure 2.1. Since the enthaplies of the helium-3 in the two phases are different, it is possible to obtain cooling by "evaporating" the helium-3 from the concentrated phase into the dilute phase. This process continues to work even at the lowest temepratures because the equilibrium concentration of helium-3 in the dilute phase, is still finite even as the temperature approaches absolute zero.

When the temperature of the helium-4 is below about 0.5K, it can be regarded as being in its quantum mechanical ground state. It has zero spin and is superfluid. The helium-3 atoms however, have a spin of one half and in the dilute phase their behaviour can be described as that of an ideal Fermi-Dirac gas. They move through the helium-4 (which is both thermally and hydro-dynamically inert) as if they were in a vacuum. In the dilution refrigerator this gas is formed in the mixing chamber at the phase boundary, and the cooling obtained by this process is used to cool a sample.

In a continuously operating system, the helium-3 must be extracted from the dilute phase (to prevent it from saturating) and returned into the concentrated phase keeping the system in a dynamic equilibrium. Figure 2.2 shows a schematic diagram of a continuously operating dilution refrigerator. The helium-3 is pumped away from the liquid surface in the still, which is maintained at a temperature of 0.6 to 0.7K. At this temperature, the vapour pressure of the helium-3 is about 1000 times higher than that of helium-4, so helium-3 evaporates preferentially. A small amount of heat is supplied to ensure that the still does not cool as this evaporation takes place.

The concentration of the helium-3 in the dilute phase in the still therefore becomes lower than it is in the mixing chamber, and consequently there is an osmatic pressure difference which drives a flow of helium-3 to the still. The helium-3 leaving the mixing chamber is used to cool the returning flow of concentrated helium-3 in a series of heat exchangers. In the region where the temperature is above about 50mK, a conventional coiled tubular heat exchanger can be used effectively, but at lower temperatures than this the thermal boundary resistance (Kapitza resistance) between the liquid and the solid walls increases with T^{-3}, and so the contact area has to be increased as far as possible. This is done by using sintered silver heat exchangers, which are very efficient even at the lowest temperatures.

The room temperature vacuum pumping system is used to remove the helium-3 from the still, and compress it to a pressure of a few hundred millibar. Since the cooling power of a dilution refrigerator is directly proportional to the flow rate of helium-3, the large cooling power refrigerators must have very powerful pumps, and wide pumping lines are needed in the low pressure regions.

The gas is then passed through filters and cold traps to remove impurities and returned to the cryostat, where it is precooled in the main helium bath and condensed on the 1K pot. A flow impedance in the form of a capillary tube is used to maintain a high enough pressure in the 1K pot region for the gas to condense.

The experimental apparatus is mounted on the mixing chamber, ensuring that it is in good thermal contact. All connections to the room temperature equipment must be thermally anchored at various points on the refrigerator to reduce the heat load on the mixing chamber to the minimum, giving the lowest possible base temperatures. If the experiment is to be carried out at higher temperatures, the mixing chamber can be warmed by applying heat to it directly, and a temperature controller can be used to give good stability.

This description should enable the operator to understand the detailed description of the operating procedure of the system, which will be found later in the manual.

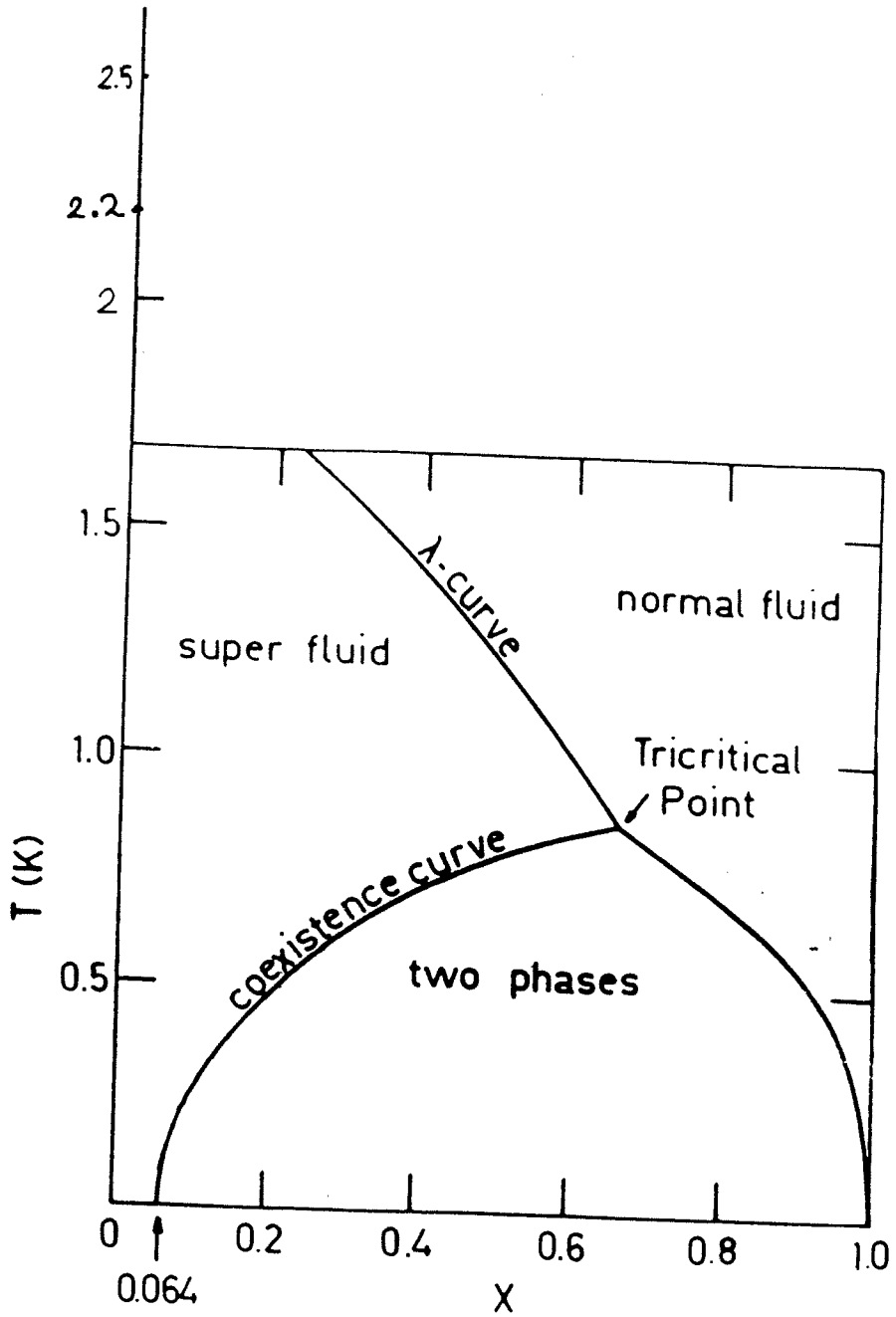

figure 2.1 Phase diagram of $^3He/^4He$ mixtures, $x = n_3/(n_3 + n_4)$ is the ^3He concentration. The tricritical point is at 0.86 K.

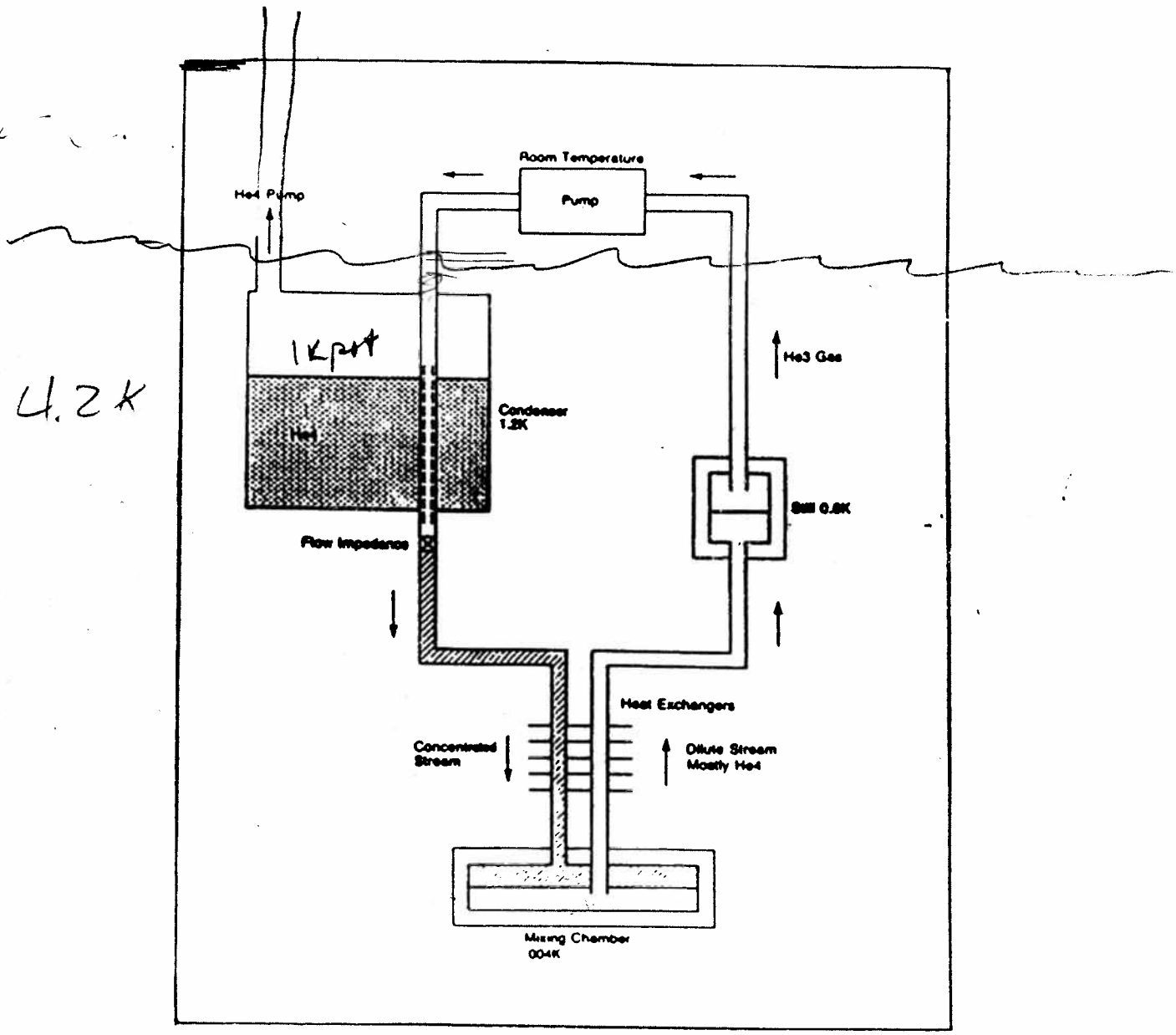

fig 2.2 A schematic diagram of the dilution refrigerator

Section 3

3.1 Description of insert and dilution unit

Enclosed with the manual are drawings of the top plate, the top of the IVC and the bottom of 1K pot, with a description of all ports and services needed for the operation of the D/R or for customers use.

Drawing No.	AFA0410	System GA
	AFA0601	Sample Holder
	ARZ0403	Pumping Cabinet

100 micromoles/sec
or
0.12 lt/min

Section 4

4.1 The helium-3 gas handling system

The circuit diagram for the helium-3 gas handling system as it is drawn on the panel is shown in ARZ0403.

The helium-3 is circulated by a 9B3 booster pump, backed by a Leybold 65m^3 rotary pump. This combination is capable of circulation rates up to approximately 800 micromoles/sec. The pumps are switched from the panel.

Two Pirani gauges are fitted to measure the inlet pressure P1 and the booster backing pressure P2.

The inlet pressure can also be seen on G2 via valve 7. The helium-3 is filtered through oil mist filters and the outlet pressure is seen on G4 which is fitted with a trip switch normally set at around 950 mbar. When triggered, the safety circuit is activated, and it will stop the pumps and open a by-pass valve (parallel to valve 2) between the condenser line and the still pumping line.

In continuous operation the helium-3 is filtered through one of the two nitrogen cold traps (CT1 or CT2) and flows back into the system via the return line and a helium cold trap. After passing through these cold traps the helium-3 is returned to the cryostat.

The mixture is stored in the dumps which are accessible from the panel via valves 5 and 9. The dump pressure is read on G1. The dump vessels themselves are individually supplied with shut off valves, so that each dump can be isolated from the others.

Air or exchange gas can be pumped out of the system through valves 6 and 10. The points marked "B" on the panel are all connected together, and an auxiliary pump can be connected to the manifold. A leak detector can be fitted to the point marked "Vent 1" giving access to the system through valve 11. The warning lights on the panel indicate the following faults.

1. 1K pot rotary pump failed.
2. Backing pump for high vacuum diffusion pump failed.
3. Diffusion pump failed.
4. Booster pump over-heated.
5. Helium-3 rotary pump failed.

4.2 Helium-4 and high vacuum system

The circuit diagram as shown on the left side of the panel is reproduced in ARZ0403.

As can be seen, there are five lines going to the insert and dewar:

- The OVC line that connects to the Outer Vacuum Can of the dewar.
- The vacuum lock line should be used while inserting the top loading probe.
- The recovery line, which is connected to the main helium-4 bath, and can be connected to the customers recovery system. The pressure is measured on G5.
- The right-hand line runs to the IVC, inner vacuum can, which surrounds the dilution unit and the 1K pot.
- Next to that runs the 1K pot line, which is used to pump the helium-4 from the 1K pot thereby reducing its temperature to about 1.2K, and enabling the helium-3 to condense. The system is fitted with an Edwards E1M18 rotary pump. Gauge G6 indicates the pot pressure.

After assembly of the tails and closing of the dewar the OVC should always be the first to be pumped. In any case BEFORE THE MAIN BATH IS PUMPED.

Both OVC and IVC are pumped with a 180 l/sec vapour diffusion pump, which is backed by an Edwards E2M8 roughing pump. Either this pump or the 1K pot pump cam be connected to line B which connects to the Helium-3 gas handling system.

The diffusion pump circuit includes a Penning and Pirani gauge (P3) to monitor the inlet and backing pressures respectively.

All the different spaces 1K pot, OVC and IVC can be vented with exchange gas from the recovery system or an external source via Vent 2.

CHECK THAT DR INSERT IS PROPERLY SEATED ON O RING FLANGE FOR INNER/OUTER WINDOW ALIGNMENT. THERE ARE 3 ADJUSTING SCREWS IN DR MOUNTING PLATE FOR HEIGHT/ANGLE ALIGNMENT.

Section 5

Cooling Procedures

This section assumes that the system has been properly installed and the gas handling system, interconnecting lines and insert have all been leak tested and are leak tight. Furthermore it is assumed that the system has been run before.

5.1 Fitting experiments and closing the insert

The insert is fitted with 3 x 18 electrical leads which end in flat connectors under the 1K pot. Twelve leads are permanently in use for the operation of the dilution unit, the others are available for experiments.

Before closing the IVC the system should be carefully checked for any radiation leaks from room temperature through holes in the IVC top flange. Stainless tubes act as good wave guides for this radiation whose intensity is 46 mW/cm^2.

Also check all electrical connections to the dilution unit (see section 11) and your experiment.

Before closing the IVC it is advised that the 1K pot needle valves are checked. This is done as follows. Close the needle valves (17, and 18 in AFA0410) and using the He^4 pump evacuate the 1K pot to 0.1 mbar (zero on G6). Close valve 24 and check that each needle valve can be opened smoothly and monitor the throughput by checking how quickly the pressure rises on G6. Throughput values greater than 10mbar/min should be expected.

17, 18 separate main bath from 1K pot Helium flow from main bath to 1K pot

Having checked the 1K pot and the electrical connections, we advise that the ^{3}He capillary throughput is checked as described in the next section.

5.2 Checking capillary throughput

The dilution unit is fitted with a flow impedance below the condenser in the form of a restricted capillary. This should be checked to ensure it has the right throughput and is not blocked by any contaminants.

Using the high vacuum pumping system evacuate line B which connects the helium-3 system via valve 10 with the auxiliary pumping system. Then open valves 2, 3, 6, 7 and 10 and evacuate the dilution unit. If the system has been run recently and the lines or mixing chamber have not been opened, the pressure inside the dilution unit should be less than a few mbar. If the pressure is higher than this, it is likely that there is some contamination in the system.

Close valves 2, 6 and 10. Connect a supply of pure helium-4 (99.99%) to vent 1. Open valves 10 and 11 to evacuate the line, close valve 10 and fill it with pure helium gas.

Open valve 6 slowly to allow the pressure in the still line to rise to 1 ~~bar~~, which can be seen on gauge G2. The capillary throughput can now be compared with the test results as given in Section 10 and should be within approximately 25%.

After verifying the capillary throughput open valve 2 to equalise the pressure in the still and condenser lines. Close valve 11, open 10 and re-evacuate the dilution unit via line B.

Close the IVC and fit the dewar tails. Then check all the electrical connections again.

5.3 Room temperature test !! MAKE SURE THAT IVC PUMP LINE COAXIAL VALVE IS OPEN, TURN CLOCKWISE !!

Using the roughing pump/diffusion pump system, pump the OVC. When the pressure is less than 1 mbar close the OVC and open the valves to the IVC.

Check the pressure in the dilution unit (D/U) on G2 and G3 is less than 1 mbar. If not open valves 10, 6, 7, 2 and 3 to connect the D/U to the auxiliary pump via line B and pump to less than 0.1 mbar. Make sure the helium cold trap valves in the return line are open.

Connect a leak detector to the port below valve 36 on the auxiliary panel, and pump the IVC and OVC to a high vacuum.

Close the needle valves to the 1K pot. Evacuate the helium can and 1K pot using the helium-4 pump. Stop pumping when the pressure is below 1 mbar. Vent the helium bath to 1000 mbar with helium gas (leaving the 1K pot under vacuum), while checking the O.V.C and I.V.C for leaks with the leak detector. This procedure can be performed by drawing gas from the recovery line, or using a separate gas bottle attached to vent 2.

Leave the leak detector connected to the IVC and by opening a needle valve, vent the 1K pot to 1 bar with helium from the main bath, while checking the leak detector signal. Close the needle valve and re-evacuate the 1K pot using the helium-4 pump. Similarly, check that all other needle valves work correctly. Check that the needle valves seal properly be watching for a pressure rise on G6 when valve 24 is closed.

When all the above tests have been completed satisfatorily, (i.e. no signal on leak detector observed), close valves 2 and 10. It is advised that the capillary throughput is checked again before cooling with nitrogen.

After verifying the capillary throughput, open valve 2 which will equalise the pressure in the still and condenser lines. At this point, check that no signal has appeared on the leak detector.

add some (He gas) He gas to IVC

Re-evacuate the dilution unit and 1K pot. Then disconnect the leak detector and connect a supply of dry nitrogen gas to vent 2. [redacted]. Fill the 1K pot with one atmosphere of clean helium gas, and maintain this pressure while the system is cooled to 77K. Make sure that the top loading entry baffles are closed and start to cool the system.

Continue to pump the O.V.C. with the diffusion pump while the system is cooled.

5.4 Liquid nitrogen tests

!! IVC COAXIAL PUMP VALVE STILL MUST BE OPEN (CLOCKWISE) !!

The helium vessel can be filled with nitrogen, to pre-cool the system to 77K.

Cooling to 77K

The port labeled magnet

Open the main bath helium recovery port to air. Insert a tube into the main helium reservoir through the siphon entry and screw it into the cone mounted on the top of the I.V.C. Connect a liquid nitrogen dewar to the top of the tube and slowly begin to transfer nitrogen into the main helium bath. It takes about 1/2 of the large (150 l?) LN_2 dewars to fill completely. Fill slowly over about 6-8 hours.

Half fill the main bath with nitrogen, and when the boil off has settled, fit a non-return valve to the helium recovery port, remove the tube from the siphon entry port and replace the bung. Wait for the dilution unit to cool to 77K by noting the resistance values. Pre-cooling time will depend on the exchange gas used in the IVC, (typically overnight for nitrogen and 6 hours for helium).

77K Test procedure

IVC COAXIAL VALVE STILL OPEN

Evacuate the IVC and connect the OVC and the IVC to the leak detector.

N.B. Do not evacuate the IVC before closing the OVC cryostat hand valve, as there should be high vacuum in the OVC. (thin window between IVC + OVC)

Insert a tube through the siphon port, ensuring that it scews into the cone on the top of the I.V.C. Connect the top of the tube to one of the liquid nitrogen reservoir filling bushes using a length of silicon rubber tube. Pressurise the helium reservoir with a small overpressure of helium gas and blow all the liquid nitrogen out of the main bath into the nitrogen reservoir. Pressurisation is conveniently done using a gas bottle connected to the vent of the exchange gas manifold. pump 2 vent

When the liquid nitrogen level is below the level of the blow-out tube in the main bath, the pressure drops. This can be checked by stopping the gas flow at vent 2, removing the rubber tube from the top of the blowout tube and ensuring that no liquid comes from the blowout when the bath is pressurised again.

Remove the blowout tube and put the bung in the siphon entry. The bath should now be evacuated using the helium-4 pump, and the pressure should fall steadily to less than 1mbar. If the pressure hesitates at approximately 100mbar, it is likely that there is still some liquid nitrogen in the bath, and this should be removed by inserting the blow-out tube and pessurising the bath again.

10~5mbar is OK

When the main bath pressure has been reduced to less than 1mbar the 1K pot should also be evacuated, also using the helium-4 pump. Then close the valve between the 1K pot line and recovery line (valve 31 in ARZ0403) and connect the helium recovery line back to the cabinet. Vent the main bath to 1000 mbar with helium gas as previously described while watching the leak detector. Open a needle valve and vent the pot to 1000 mbar with helium gas. Close the needle valve and check that the other needle valve is not blocked. Connect both the 1K pot (via valve 31) and the main bath to the recovery line.

Evacuate the dilution unit via line 'B' using the rotary pump by opening valves 10, 6, 7, 3 and 2. Purge the line, close valves 6 and 2, and vent the still pumping line to 1000 mbar of pure helium gas, via the front panel vent, using the method described previously. Check that the capillary throughput on gauge G3 is between x6 and x8 of the room temperature throughput. Open valve 2 to vent the condenser line to 1000 mbar, checking that no signal has appeared on the leak detector. Evacuate the dilution unit using the roughing pump and then close valves 10, 11 and 6 on the helium-3 panel leaving 3, 7 and 2 open.

high pure ^3He

Change litre pot when @ ~20% full. (so that cone no longer used) →40%

5.5 Cooling to 4.2K

Isolate the I.V.C. and admit approximately 3 litres (a balloon of 6 or 7" diameter) of helium exchange gas to the I.V.C. using the exchange gas manifold. Continue to pump the O.V.C. until liquid helium collects in the main bath.

Insert the helium transfer siphon ensuring that it fits into the cone on the IVC. Transfer helium at about 100-200 litres of gas per minute. When the level reaches 35° raise transfer tube (in DR) about 2". When the resistors have cooled to within 20% of their 4.2K values, begin pumping the exchange gas from the I.V.C. (As an indication, this should happen at about the time liquid starts to collect in the main bath). Continue the transfer until the desired helium level is achieved. Top up the liquid nitrogen jacket.

6-8K WHEN THE BATH FULL

The I.V.C. should be pumped for at least 5 hours using the diffusion pump. The helium signal should then be less than 10^{-6} mbar l/sec, as determined by the leak detector. During this time, the 1K pot should not be cooled to below 4.2K.

N.B. The above describes one method of cooling from 77K to 4.2K. Several other methods may be used, such as the "20K transfer" method or by employing different exchange gas in the I.V.C. The exact method to be used depends on personal preference and experience will indicate the exact point at which exchange gas should be pumped away in order to produce the most efficient cooldown cycle.

NOTE: WHEN THE OVC HAS BEEN CHECKED FOR LEAKS FROM THE MAIN BATH, THE O.V.C. HAND-VALVE ON THE CRYOSTAT SHOULD BE CLOSED, MAKING IT DIFFICULT TO VENT THE O.V.C. ACCIDENTALLY.

5.6 Cooling to 1.2K

24

Make sure that the 1K pot needle valves are closed and start pumping the pot, checking that the pressure drops to below 1 mbar. Connect the leak detector to the IVC and watch for leaks as one of the needle valves is opened. The pressure on G6 will rise to a steady value as the pot fills, and will suddenly increase after a few minutes, indicating that the pot is overflowing. Close the needle valve and pump the pot to base temperature.

5.7 Introduction of the Sample

The sample may now be introduced into the refrigerator. The procedure for top loading is described in section 6.

N.B. IVC BAFFLE IS OPEN WHEN THE WORD "OPEN" IS PARALLEL TO IVC PUMPING LINE

5.8 Condensing mixture and starting circulation

When the 1K pot is filled with helium and pumped to below 10 mbar, check that no signal has appeared on the leak detector. If not then close valve 2. Check valves 3 and 7 and the valve on top of the helium cold trap is open. Open the dump hand valves and slowly open valve 5, to allow the mixture to condense into the still and dilution unit. Gauge G3 should indicate 20-50 mbar after a few minutes. Condense the mixture at about 150-200 mbar pressure on gauge G2. It may be necessary to re-fill the 1K pot as previously described. Continue to condense the mixture until valve 5 is fully open and the still pressure is about 100 mbar, (which typically takes 1 hour). During this time, refer to section 5.11 and clean out the cold traps.

Switch on the sealed rotary pump. A small amount of mixture may have passed back through the pump to its inlet side. Gauge G4 should return to the pressure it reached at the end of the previous run. If G4 is more than 100 mbar condense this via valve 9 with the mixture from the dumps. When G4 and G2 show the same pressure of about 100 mbar close valve 9 again.

Fill the liquid nitrogen cold trap dewar. Check that the switch on G4 is set to activate at approximately 950 mbar. Put the cold traps in the dewar and open valve 8, allowing the mixture in the exhaust of the sealed pump to enter one of the traps and cool to 77K. Check that the helium cold trap has been lowered into the cryostat and is open. Connect the back of the sealed pump to the condenser line by opening valve 1. Begin circulation by cracking valve 12 open keeping the pressure on G4 below 950 mbar*, the pressure at which the bypass valve is activated. Gradually open valve 12 until it is fully open and P2 is less than 1 mbar. The pressure on G4 should begin to fall.

*but close to it

Transfer to the booster pump by opening valve 13, closing valve 12, and opening the booster isolation valve (Q.S.B.). Check that the booster has not stalled, by noting P1 < P2. When P1 falls below 0.1 mbar, energise the still heater to promote the circulation required.

The refrigerator should now cool to its base temperature.
HERE ONE MUST CLOSE (COUNTER CLOCK) INC COAXIAL VALVE TO GET TO BASE TEMP.
For overnight operation, ensure valves 5 and 7 are open, together with the hand valves on the storage dumps. Check that sufficient liquid refrigerants are in the cryostat and cold trap dewar.
(To prevent boost a stall, keep QSB closed & open 13 for about 20 min. Then close 12 & open QSB when P2 ~

5.9 Changing temperature and flow rates

The flow rate is primarily determined by the amount of heat put into the still and varies approximately linearly with the still power. 0.5 mW?

To reach the base temperature the flow rate should be set as indicated on commissioning and all extra heating from the experiments should be minimised.

If the basic heat load from the experiment is higher the flow rate will have to be adjusted accordingly, and the final temperature will be higher as well.

The temperature can now be varied by either changing the flow rat or by putting extra heat into the mixing chamber via the M/C heate or the experiment. An electronic temperature controller can b used, but one should be aware that below 20 mk, the time to reac equilibrium will be long - sometimes up to an hour.

Experience will teach you what is the best operating mode for you application.

5.10 Operation of the continuous fill needle valve on the 1K pot

Measure the helium boil off from the 1K pot in the single shot mode. Open a needle valve sufficiently to increase the boil-off by just more than a factor of two. At this rate the pot will fill continuously.

The level in the 1K pot can be conveniently seen on the level meter provided. Note that the electronics are set differently for the probe operating in superfluid. The 1K pot level indicator and the main bath indicator electronics are not interchangeable.

Section 6

Top Loading Procedure

The 400 TL dilution refrigerator is designed to allow samples to be loaded into the cryostat without warming it above approximately 2.5K. Four electrical connections can be made to the sample through the contacter block on the mixing chamber. A special "top loading siphon" is used to insert the sample holder, and in conjunction with the "delivery siphon" it is also used to pre-cool the sample to liquid helium temperatures. This is done by drawing liquid from the main bath through the siphons, using a small pump. Note that care must be taken not to let air into the top loading access as this will prevent the proper operation of the system. Also, if the baffles are damaged during top loading, (so that they will not close properly), the refrigerator will not reach base temperature.

6.1 Loading the sample into the refrigerator

The aligning sample holder should be screwed firmly anti-clockwise onto the lower end of the top loading siphon and drawn into the vacuum lock. The two parts of the sample holder should be screwed together finger tight (refer to AFA0601). Note that this connection has a left hand thread. Mount the vacuum lock on the gate valve on the top of the cryostat. The gate valve must be closed, maintaining the vacuum in the IVC. Make sure that the IVC and OVC valves are also closed.

Rough out the vacuum lock and sliding seal, and transfer to the diffusion pump. When the pressure is reduced to 10^{-4} mbar, close the valve to the vacuum lock and open the gate valve and lower the top loading probe until the sample holder is a few inches above the 4.2K baffle, taking care not to touch it. During this procedure the sliding seal should be pumped to prevent any air which passes the first 'O' rings from entering the IVC.

120cm to shoulder on probe

Insert the delivery siphon into the main bath and connect the delivery siphon to the top loading siphon. Pressurise the main bath slightly and check that the two siphons are not blocked, by observing the gas coming out of the siphon exit. If there is no blockage, connect this port to the top laoding pump using the polythene line. Pressurise the main bath slightly, by closing off the recovery valve and using a bladder.

Prepare the refrigerator by closing valve 5, the QSB valve, and valve 13. Maintain helium-3 circulation on the rotary pump only, and turn off the still heater.

SHUT DIFF PUMP OFF

Draw liquid helium through the top loading siphon to cool the sample holder. This should take approximately 30 minutes when loading the sample or approximately 15 minutes when the siphon is being cooled to remove the sample. When the sample is at about 4.2K the note of the pump may change, as liquid helium is drawn out of the siphon exhaust. If the pump line is removed from the siphon a jet of liquid will be seen. The next stages are most easily performed with two operators, one for the top laoding probe and one for the pumping cabinet.

The siphon operator opens the radiation baffles (19 in AFA0410) and disconnects the top loading siphon from the delivery siphon after the main bath has been de-pressurised. He withdraws the delivery siphon from the main bath and lowers the top loading siphon through the dilution unit to the mixing chamber. The cabinet operator watches the pressure on G4 carefully during this procedure. When the sample holder touches the mixing chamber, the pressure on G4 will rise. If the pressure approaches 1 atmosphere some helium-3 should be allowed into the dumps by opening valve 9.

Sample is seated when distance from shoulder to top of lock nut = 9.5 cm

The siphon operator then rotates the siphon clockwise to load the sample (anti-clockwise to unload). The clockwise motion firstly unlocks the thread between the two parts of the sample holder and then locates and locks the upper part of the sample holder into the tail piece (refer to AFA0601). The locking of this upper piece ensures that thermal contact between the sample holder and tail is obtained. Once the sample holder is tight in the tail piece the connection between the sample holder and siphon will break free. The siphon must be rotated further until it is free to be withdrawn, and it is pulled up to a point above the 4.2K baffle. The baffles are then closed, and the probe can be withdrawn completely and the gate valve closed.

When the sample holder cools to the temperature of the mixing chamber the pressure on G4 will begin to fall. When it has dropped to about 500 mbar the helium-3 from the dumps can be allowed back into the circuit by slowly opening valve 5. When P2 drops to about 1 mbar, transfer circulation back to the booster pump as described in section 5.8. energise the still heater when necessary, to promote the required circulation, and the refrigerator should cool to base temperature.

6.2 Unloading the sample

The sample is unloaded by following the same procedure, pre-cooling the siphon before screwing it onto the sample holder. Note that the siphon must be rotated in the opposite direction.

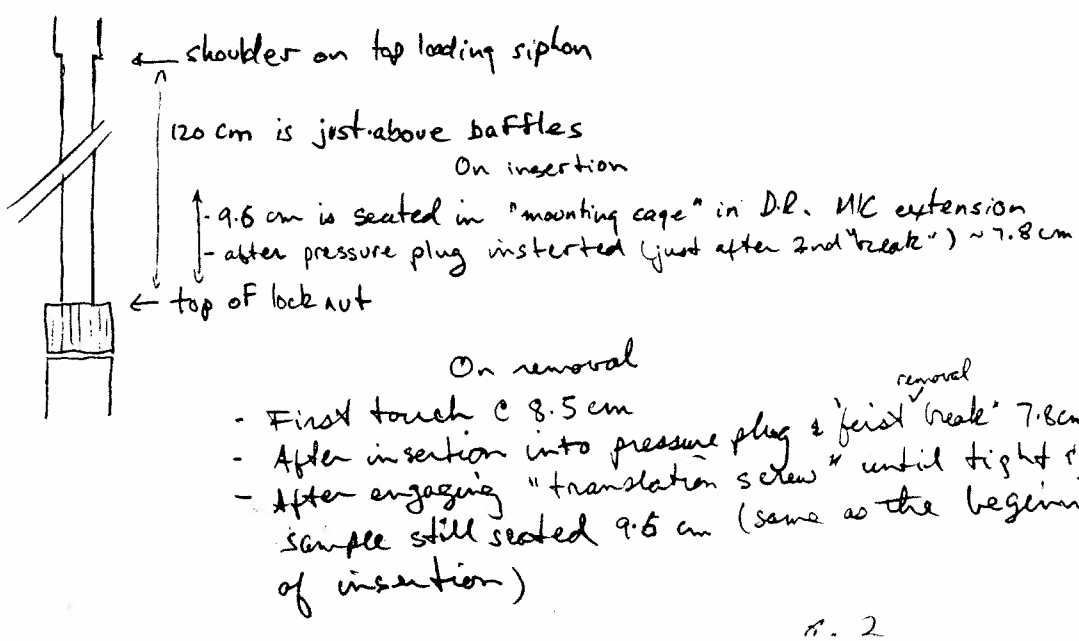

6.3 Operating Procedures - Co^{60} Sources (15 micro-curies)

A. General

1. The procedure for mounting the source in the cryostat must be carried out as quickly as possible.

2. Keep source in container/safe box until required.

3. Handle source with tweezers. Avoid direct contact - hands and other parts of the body must not come into contact with the radiation source.

4. Do not stare directly at the source.

5. Do not leave crystal unattended without identification.

6. Wash hands thoroughly immediately after contact.

B Mounting of Co^{60} Sources

1. Ensure that the surface on which the crystal is to be mounted is machined and tinned with Woods Metal.

2. Using a soldering iron, tin the crystal with Woods Metal.

3. Place the crystal on holder and press down with soldering iron, ensuring that the crystal is flat on the holder surface. Do not touch the crystal at any point in this procedure.

4. Do not use a naked flame in the vicinity of the crystal.

5. Wash hands, and any tools used to touch the crystal.

6. Avoid all direct contact with the crystal.

C. Removal of Co^{60} Sources

1. Remove the source from its holder and immediately place it in the container. Do not touch the source - use tweezers at all times.

2. Wash hands and clean all tools used to touch the crystal.

Section 7 !! BEFORE CLOSING DOWN OR WARMING OPEN IVC COAXIAL PUMP LINE VALVE (CLOCKWISE) ALL THE WAY !!

Closing down and warming up procedure

To stop the refrigerator, close the booster isolation valve (QSB) and valve 13. Equalise the still and condenser pressures by opening valve 2. Connect the still and condenser lines to the dumps by checking that valves 3, 5 and 7 and the dump hand valves are open. The system will tend to warm slowly under these conditions. To speed the warming, stop pumping the 1K pot and open a needle valve. When the 1K pot pressure is 1 bar open valve 31 to connect the 1K pot to the main bath and the recovery system. Admit a few ccs of helium exchange gas into the I.V.C. Close valves 8, 8A and 5, open valve 9, and slowly open valve 12 to bring the mixture back to the dumps, using the sealed rotary pump. Check that valves 1 and 1A are both open. As long as there is liquid helium in the main bath it will be very difficult to get all the mixture out. To help the boil off of the mixture energise the still heater and the mixing chamber heater to their maximum. If one does not want to wait until all mixture has come out it can be left like this while the helium in the main bath boils off completely. It is advised however to remove all the mixture before the unit has warmed to 60K. To do so open valve 13 and switch to the 9B3 booster, and pump at full speed. Check that all the mixture has been recovered by noting that the dump pressure G1, has returned to its original value. Close all the hand valves on the dumps for security.

If wished, the O.V.C. may be softened with about 1cc of helium gas to speed up the warming procedures.

Switch off the pumps, bearing in mind the usual procedures for switching off diffusion pumps. Check that the vacuum system, helium-4 bath, 1K bath and helium-3 system are all safe, particularly with respect to warming and possible build up of pressure. Switch off the helium-4 pump, ensure that the 1K pot is safe by opening a needle valve, and the bypass valve, to the main He bath (valve 31). The system should be left open to the helium recovery line, until the cryostat has warmed to room temperature.

Allow the refrigerator to reach room temperature before attempting to remove the cryostat tails.

Section 8

Maintenance and routine checking operations

8.1 Introduction

It is recommended to keep a good record of the operation of the refrigerator. Especially check the amount of mixture in the storage (dump) vessels by noting G1 at the beginning and end of each run.

At the beginning of each run open valves 2, 3 and 7 (these should normally be left open) and check the pressure in the dilution unit. Unless the dilution unit has been opened the pressure should be less than a few mbar. If more pressure is indicated, either there is an air leak in the system, which should be traced and cured, or the mixture was not properly removed during the close down at the end of the previous run. Any contamination should be removed via line B as described in section 5.2.

Before the start of the run the cold traps should be warmed up to 100°C and pumped to below 10^{-2} mbar as described in section 5.11.

Periodically, check for contamination of the oil mist filter. It is unlikely that this will ever require attention. The cryostat should be kept clean.

The dilution unit should be kept in a dry state, and warmed to room temperature before the tails are removed. This will prevent excessive condensation of moisture on the cold sections. None of the seals should require any attention.

The gas handling system contains several components not made by Oxford Instruments e.g. rotary pumps, vacuum gauges and valves. For these components we recommend that the manufacturers instructions for maintenance (which are sent with the dilution refrigerator) are followed.

8.2 Use of the Cryopump

A small cryopump is supplied with the system, and it should be used to remove the mixture left in the pipes between valves 5, 8, 8A and the sealed rotary pump if maintenance work is to be carried out on this part of the system.

The flexible line of the cryopump should be connected to "vent 1" on the helium 3 panel, and the line should be evacuated through line "B" and valves 10 and 11. Valves 2, 7, 8 8A, 10 and the individual dump valves should all be closed. Lower the cryopump into a liquid helium storage dewar and open the "Hoke" valve, then open valves 11, 6, 5 and 9. When the pressure on G2 has dropped to a steady value, valve 9 and the Hoke valve should be closed, and the cryopump should be lifted out of the storage vessel. Open the dump valves and slowly open the Hoke valve. When the pressure has reached equilibrium, close the dump valves and repeat the process until all the mixture has been removed from the pump, and stored safely in the dump vessels. Then use the cryopump to store the mixture which remains in the pipework.

IT IS IMPORTANT THAT THE CRYOPUMP IS ONLY USED TO STORE THE SMALL AMOUNT OF MISTURE WHICH WAS IN THE PIPEWORK. IF TOO MUCH MIXTURE IS PUMPED INTO THE CRYOPUMP, IT IS POSSIBLE TO DEVELOP DANGEROUSLY HIGH PRESSURES.

When the mixture is allowed back into the system it is important to make sure that the high pressure "Hoke" valve is only opened slowly, and that the other valves i.e. 6, 7 and 11 are already open. In this way the only part of the pipework which is subjected to a high gas pressure is within the cryopump, which is designed for this purpose. The other seals in the the system are only reliable for vacuum operation.

Section 9

Security, safety and trouble shooting

9.1 Active security systems

As indicated in section 4 the helium-3 gas handling system is fitted with several sensors which, when triggered, will stop the helium-3 circulation and allow the system to warm up safely. For that purpose an electrical bypass valve is mounted parallel to valve 2, between the condenser line and the still pumping line.

This valve is "normally open" and is activated to close during running of the dilution refrigerator, i.e. when the power is switched on and the cooling water is running.

In table 9.1 we have summarised the status of the different pumps and valves after one of the sensors has been triggered.

When a fault indicator is illuminiated the fault should be rectified immediately. If one of the pumps fails it will normally blow a fuse first but is is most likely to be a failure associated with the pump or its motor. This should be checked before resetting the refrigerator. The "N_2 level low" indicator will light up if nitrogen level in the cold trap dewar is too low and no other actions are triggered. Refill immediately.

ACTION TABLE OF SAFETY SENSORS

	Booster Pump	QSB	rotary	bypass
AC power fail	off	closed	off	open
Overpressure G4	off	closed	off	open
Water fail	off	off	on	open
^{3}He rotary fail	off	closed	off	open
Nitrogen	on	open	on	closed
Booster Overheat	off	closed	on	closed
Booster fail	off	closed	on	closed

Table 9.1

9.2 Passive security systems

The 1.2K pot pumping circuit

This circuit is protected in the event of pressure rise by an overpressure relief valve fitted to the pumping line within the cabinet. A second pressure relief valve is fitted on the cryostat top plate, connected to the 1K pot by an independent line. This means that even if the pot pumping line should block for any reason, the pot itself can vent safely.

The liquid nitrogen jacket

A dangerous state could arise if the nitrogen ports on the cryostat become blocked with solid air. In order to avoid this situation, check that all ports are free during each nitrogen transfer. The cryostat may be supplied with a security blow off valve fitted on to one of the four nitrogen ports. If not then during normal running it is advisable to attach a length of rubber tube about 25 cms long to each nitrogen bush. One of these tubes should be closed with a rubber bung which will act as a security blow off valve. In atmospheres which are excessively humid, all tubes should be closed with rubber bungs and in two of the tubes, a 4cm slit should be cut with a sharp knife, thus allowing for the normal nitrogen boil off.

During helium transfers the nitrogen boil off may temporarily fall to almost zero. Therefore we advise to check 10 or 15 minutes after the transfer that the nitrogen is boiling off again and none of the ports are blocked.

The main dewar vacuum space (O.V.C.)

This is protected by means of an integral vacuum/vent valve. The main helium reservoir of the cryostat has been supplied with aluminium strengthening rings. These rings will prevent accidental collapse of the reservoir under a pressure difference of one atmosphere. However, it is recommended that the helium reservoir should not be pumped unless there is a vacuum in the O.V.C.

9.3 Action after automatic shutdown

Apart from pump failures or interruption in power or water supply, an automatic shut down will be triggered by too high a backing pressure of the helium-3 rotary pump. This is indicated on G4 which triggers the safety circuit when pressure rises above 950 mbar.

Before pressing the reset button, switch off the helium-3 rotary pump. Close valves 12 and 13, and the Q.S.B. valve.

A high G4 can be caused by either.

1) 1K pot empty. The pirani gauge P4 will indicate a pressure below 0.1 mbar. When the 1K pot warms to above 3K the helium-3 will not condense and the pressure rises, triggering the shut down.

   Action : Refill the 1K pot using one of the needle valves and restart the refrigerator as described in section 5.8.

2) There is a blockage in the return line. This can be in the nitrogen cold trap, the helium cold trap, or in the flow impedance in the dilution unit (the capillary).

   Action : Locate the blockage and remedy it, as described below.

   Checking the nitrogen cold trap

   Make sure that valves 12, 13 and the Q.S.B. are closed. Start the helium-3 pump and by cracking valve 12 open slowly start to circulate again. If a pressure difference develops quickly between G4 and G3 (the condenser pressure), the nitrogen trap is blocked. Close valve 12. Close the trap which is in use and open the other one. Crack valve 12 again and start circulation. Blocked traps should be cleared as described in section 5.11.

   Checking the helium cold trap

   Start to circulate slowly as described above. No pressure difference should develop between G4 and G3 but the bath boil-off will rise quickly. Stop circulation and switch over to another helium trap by closing and opening valves 3 or 3A, and the corresponding valves on top of the cold trap themselves. Restart circulation. If the pressures on G4 and G3 start to fall to normal pressures continue the circulation otherwise the blockage is in the dilution unit.

   A blocked helium cold trap should be removed from the dewar and cleaned as described in section 5.11.

Capillary blocked

If the blockage is not in the cold traps but in the dilution unit it is most likely to be the flow impedance below the 1K pot condenser. The system will have to be warmed up. Sometimes the blockage will disappear at around 80 or 90K. If not the system should be warmed completely and carefully checked for leaks of air and water which could have caused the blockage.

Another possible source of contamination is sometimes the vapour booster pump. If the temperature has become too high because of a fault in the electrical circuitry or because there was not enough oil in the pump, the oil may overheat and start to crack releasing hydrogen. This will condense in the dilution unit and eventually block the capillary. A careful examination of pumps circuitry, heater and oil is needed. If in doubt consult Oxford Instruments.

9.4 Loss of base temperature

Leak detection must always be performed with a helium leak detector. Merely watching for pressure rises on a Penning gauge is unsatisfactory.

Providing the refrigerator has no touches, vacuum leaks or additional heat leaks, and the capillary has the correct throughput, the system should operate successfully. At the end of a run it is advised that G1 is read and recorded, to check that no losses or gains are made to the mixture. Operation of the helium-3 circuit above 1000 mbar is not recommended. The chance of losing helium-3 is consequently virtualy eliminated.

Losses of base temperature are caused normally by:-

1. Dirty thread on the sample holder or mixing chamber.
2. Damage to, or incomplete radiation baffles.
3. Wrong circulation rate.
4. Wrong helium-3/helium-4 mixture.
5. Heat leaks caused by additional wiring not properly thermally anchored at 4.2K and 1.2K.
6. Wrong capillary throughput.
7. Bad sample mounting on the sample rod, or superconducting joints between the sample and the mixing chamber. (Note: even certain types of silver solder become superconducting below about 50 mK). Joints should be either copper/copper screwed or solder joints exposed to magnetic fields sufficiently high to suppress superconductivity.

To help finding and curing a fault, a short list of common faults is presented in the next section.

9.5 Fault finding

This is a summary of common faults and what to do to cure each one. If the problem cannot be solved and another operational fault is suspected a full set of test data should be produced and sent to Oxford Instruments for diagnosis.

1) Cold point in wrong place.	Too little helium-3 (or too much - unlikely). Dilution unit will not cool further in the single shot mode.
2) Still warms drastically on applying about 1 mW, also low circulation rate.	Still empty - too little helium-4. See sympton 1 as to whether more helium-3 is required.
3) Circulation rate and condenser pressure remain very high.	1.2K condenser not operating efficiently - can be confirmed by measuring temperature of return helium-3 as a function of circulation rate and comparing it with the pot temperature.
4) Low circulation rate and high condenser pressure with slow cooling.	Capillary impedance too high - check room temperature and 77K throughputs and re-adjust as necessary.
5) Poor percentage of helium-3 circulated.	See symptons 1 and 2. Check film burner current is correct. Check dilute side flow impedance, having first removed mixing chamber base.
6) 77K leak on dilution unit.	Check all indium seals are tight. Seals should not require replacing.
7) Poor base temperature.	Check for heat leaks from radiation, wiring, vibration, residual exchange gas. Plot base temperature as a function of circulation rate, allowing approximately 3 hours for each point. Perform single shot and watch for further cooling. If no effect, check symptoms 1 to 6. Finally check thermal contact and operation of low temperature thermometer.

8) Oscillations in still pressure which do not disappear after several hours.	Level of liquid in still rises as condenser pressure falls - remove some helium-4.
9) Oscillations in condenser pressure.	Check symptom 8 and sympton 3.

Section 10

Dilution Refrigerator Test Results

Table 10.1 **Resistor values** (ohms) (including leads)

Magnet Switch Heaters 810 910
Magnet leads

1)	R1 @ 10μV Film Burner	R2 Still	R3 Cold Plate	R5 External Mixing Chamber	R6	
R.T.	717 ~710 (1996)	703	740	360	488	203 118 116
77K	780 809	763 790	796 841	354 374	490	17-18.5 319 319
4.2K	1240	1180	1240	380	620	107 109
Base Temp	2800	2530	20.4K	6330	>100K	

Magnet "17.5 Ω" @ LN_2 Jun 97

Table 10.2 **Cooling power results**

Temp (mK)	Cooling power (microwatt)	flow rate micromol/sec	still power (mW)	film burner (mW)
24	15	–	9.5	0
45	30	–	9.5	0
116	400	–	9.5	0
[illegible]	[illegible]	[illegible]	[illegible]	0

Base temperature in sample position (at 150 micromoles/sec)	9.9 mK
Room temperature capillary throughput	12 mbar/min SEE BACK 27-28 (AFTER REPAIR) M.G.
1K pot needle valve throughput	- mbar/min
Mixture volume (at approx 16% conc.)	149 lts
Dump volume	200 lts
Liquid nitrogen bath lifetime	>48 lts
Liquid helium bath lifetime in static mode	>48 hrs (approx)
Helium boil off with fridge operational	243 cc/hr (approx)
Cooling water flow	3 l/min
Compressed air requirement	3 bar

CAPILLARY FLOW @ 77°K WITH 750 mBAR PRESS = 90 mBAR INCREASE/MIN.

PV = nRT

MIN 18,400 Ω

Section 11

Dilution Refrigerator Electrical Wiring

The dilution unit is equipped with several diagnostic carbon resistor thermometers. These have been positioned on the still, the cold plate and the mixing chamber.

From room temperature down to the 1.2K pot level, these resistors are wired using 42 s.w.g constantan wire. This wiring has been thermally dumped at 4.2K and at 1.2K, before being soldered to the flat connectors on the underside of 1K pot.

11.1 Insert and dilution unit

500 ohm nominal resistance constantan heaters are fitted to the film burner, the still and the mixing chamber. 40 swg copper wire has been used to wire the heaters on the film burner and the still, but the mixing chamber heater is terminated below 1.2K with superconducting wire. The electrical wiring to the dilution unit is demountable via a 20 way "Radio spares" flat pack connector underneath the 1K pot. The experimental wiring on the insert is also terminated at 1.2K on 20 way "Radio spares" connectors, after being dumped as described earlier. (These connectors are also supplied by 3M).

The solid co-axial lines are terminated in RADIALL subminiature series co-axial plugs. These are compatible with other manufacturers miniature co-axial connectors. The part number of the mating connectors is R 114 003.

wire from:
California fine wire Company
Grover city (805) 489-5144

The 3 Fischer connectors situated at room temperature are labelled 1-3 on their respective housings. 3 "flat pack" 20 way connectors are stacked on the base of the 1.2K pot. The wiring from Fischer connector number 1 is wired to the 20 way connector closest to the 1.2K pot. The wiring from the other Fischer connectors proceeds logically, connector number 4 being wired to the flat pack connector furthest from the bottom of the pot.

<u>Fischer connector number 1</u>

This connector is used for the dilution unit wiring via the top connector on the 1K pot.

1	Film burner	R1
2	Still	R2
3	Cold plate	R3
5 ~~4~~	Mixing chamber	~~R4~~ R5 } on Oxford controller
6 ~~5~~	Mixing chamber	~~R5~~ R6 }
6		
7	4 is N/C	
8	Common line for resistors	
9		
10		
11		
12		
13)		
14)	Film burner heater (500 ohm nom.)	
15)		
16)	Still heater (500 ohm nom.)	
17)		
18)	Mixing chamber heater (500 ohm nom.)	

outside measures x 700 Ω

Lines 1-10 are wire in constantan, 11-18 in copper, to the 1K pot. For Connectors Connector #2 is all constantant. Connector #3 is all copper wiring.

All leads on the other Fisher connectors (2-4) are spare for customer use.

A

2

B

C

11.2 Pumping System

A full set on electrical diagrams of the gas handling system is included in the manual.

FUSE DETAIL

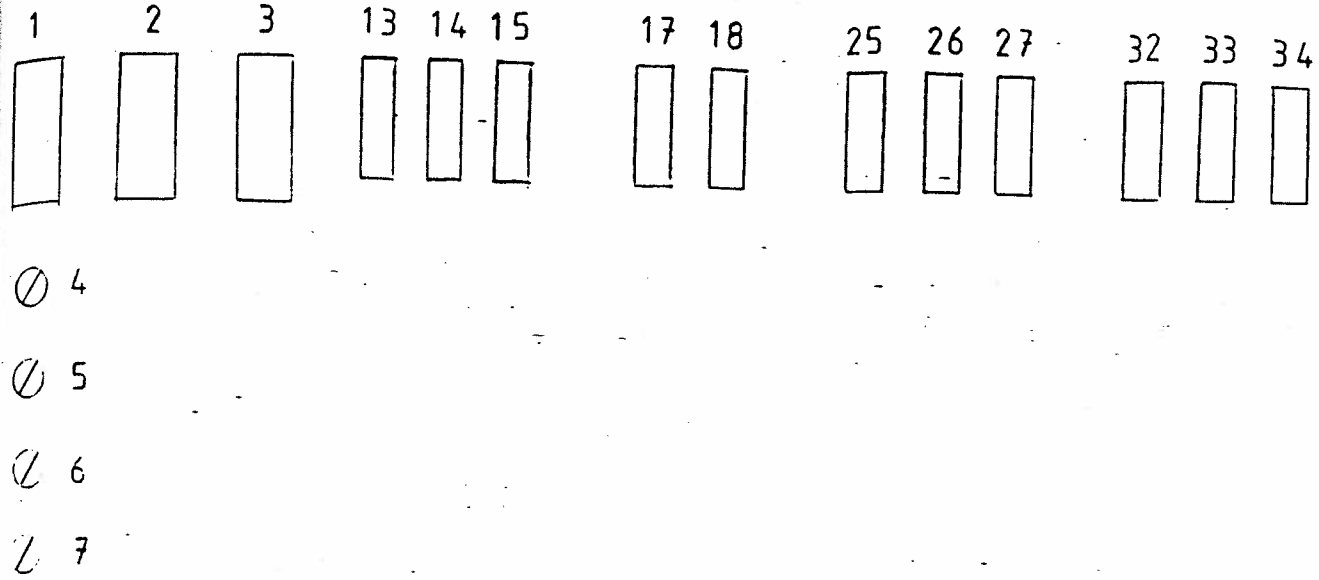

FUSE DETAIL

28677

NO	FUNCTION	FUSE	FUSE HOLDER
1	MAINS IN RED Ø	30 A TIA	RS 32 P
2	MAINS IN YELLOW Ø	30 A TIA	RS 32 P
3	MAINS IN BLUE Ø	30 A TIA	RS 32 P
4	COIL C1	1 A HBC	PANEL MTG 1¼"
5	PHASE DET. RED	60 M/A QB	PANEL MTG 1¼"
6	PHASE DET. YELLOW	60 M/A QB	PANEL MTG 1¼"
7	PHASE DET. BLUE	60 M/A QB	PANEL MTG 1¼"
8	TX PRIMARY	1 A HBC	SAKS
9	TX SECONDARY	3 A HBC	SAKS
10	GAUGES	2 A HBC	SAKS
11	L2 LOOP	5 A HBC	SAKS
12	COIL C2	750 M/A T	SAKS
13	HE^3 ROT	16 A NIT	RS 20 P
14	HE^3 ROT	16 A NIT	RS 20 P
15	HE^3 ROT	16 A NIT	RS 20 P
16	COIL C3	750 M/A T	SAKS
17	BOOSTER RED Ø	10 A NIT	RS 20 P
18	BOOSTER BLUE Ø	10 A NIT	RS 20 P
19	RL 7-2	100 M/A T	SAKS
20	RL 7-7	100 M/A T	SAKS
21	MARTIN AIR VALVE	750 M/A	SAKS
22	BY-PASS VALVE	500 M/A T	SAKS
23	DIFF FAN	1 A HRC	SAKS
24	COIL C4	750 M/A T	SAKS
25	ROT 'A' PUMP	10 A NIT	RS 20 P
26	ROT 'A' PUMP	10 A NIT	RS 20 P
27	ROT 'A' PUMP	10 A NIT	RS 20 P
28	COIL C5	750 M/A T	SAKS
29	DIFF PUMP	2 A HBC	SAKS
30	COIL RL 13-2	100 M/A T	SAKS
31	COIL C6	750 M/A T	SAKS
32	HE^4 ROT	16 A NIT	RS 20 P
33	HE^4 ROT	16 A NIT	RS 20 P
34	HE^4 ROT		

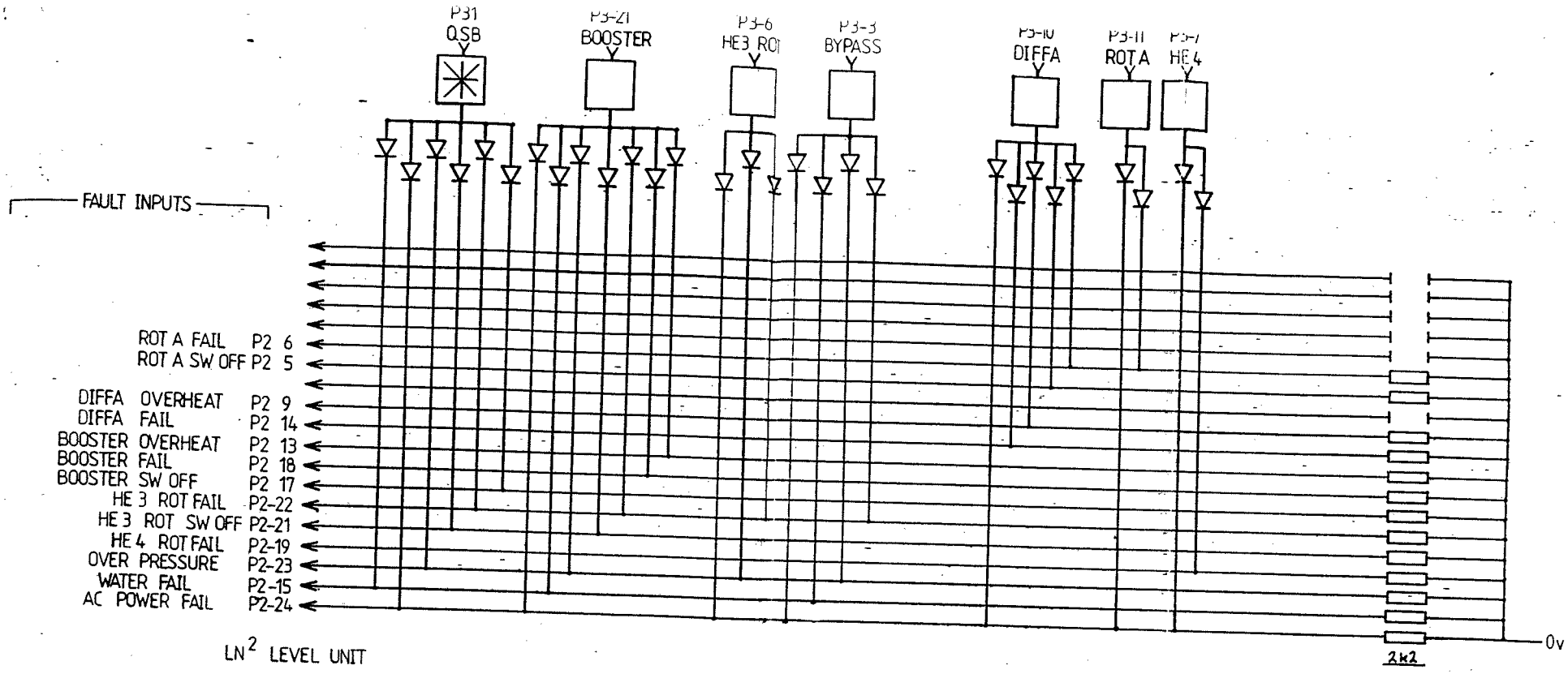

NB, ALL DIODES MARKED THUS ⊣◀ MAY REQUIRE ADDITIONAL DRILLING OF PCB, ALSO CHECK ALL TRACK CONFIGURATIONS.

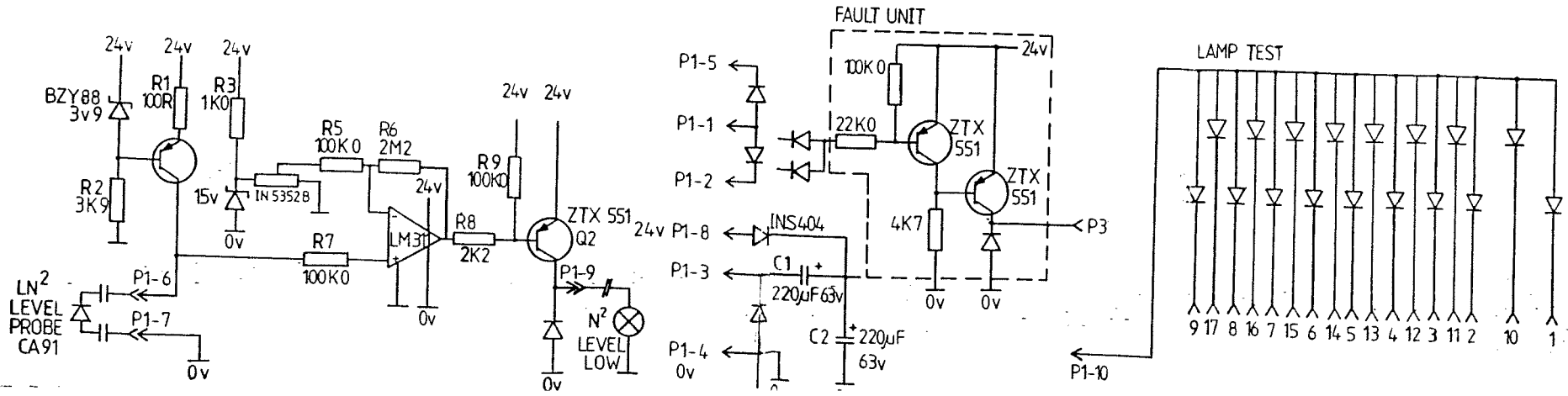

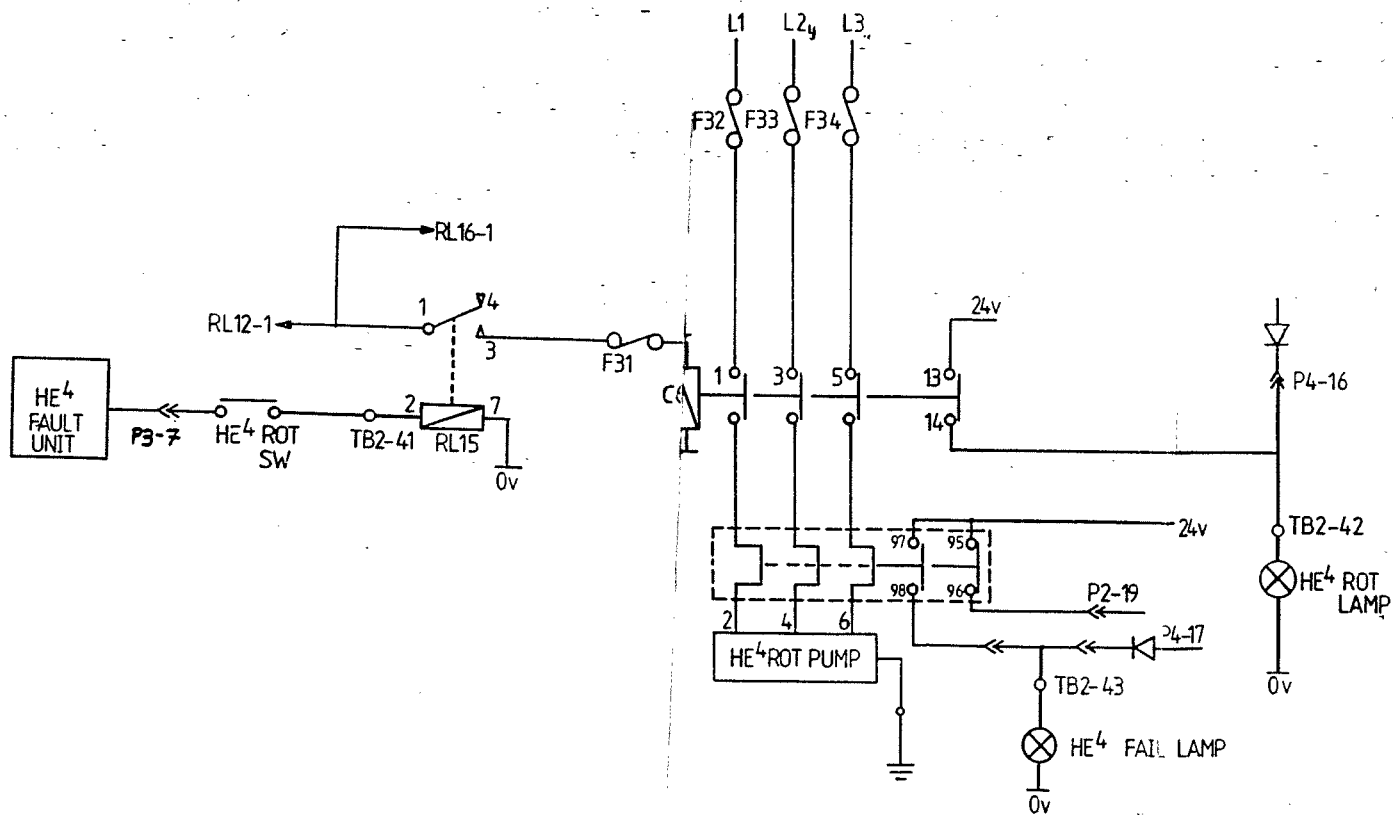
L1
L2
L3
F32
F33
F34
RL16-1
RL12-1
1
4
3
F31
24v
1
3
5
13
14
P4-16
HE4 FAULT UNIT
P3-7
HE4 ROT SW
TB2-41
2
7
RL15
0v
97
95
98
96
24v
TB2-42
HE4 ROT LAMP
P2-19
2
4
6
HE4 ROT PUMP
P4-17
TB2-43
HE4 FAIL LAMP
0v
0v

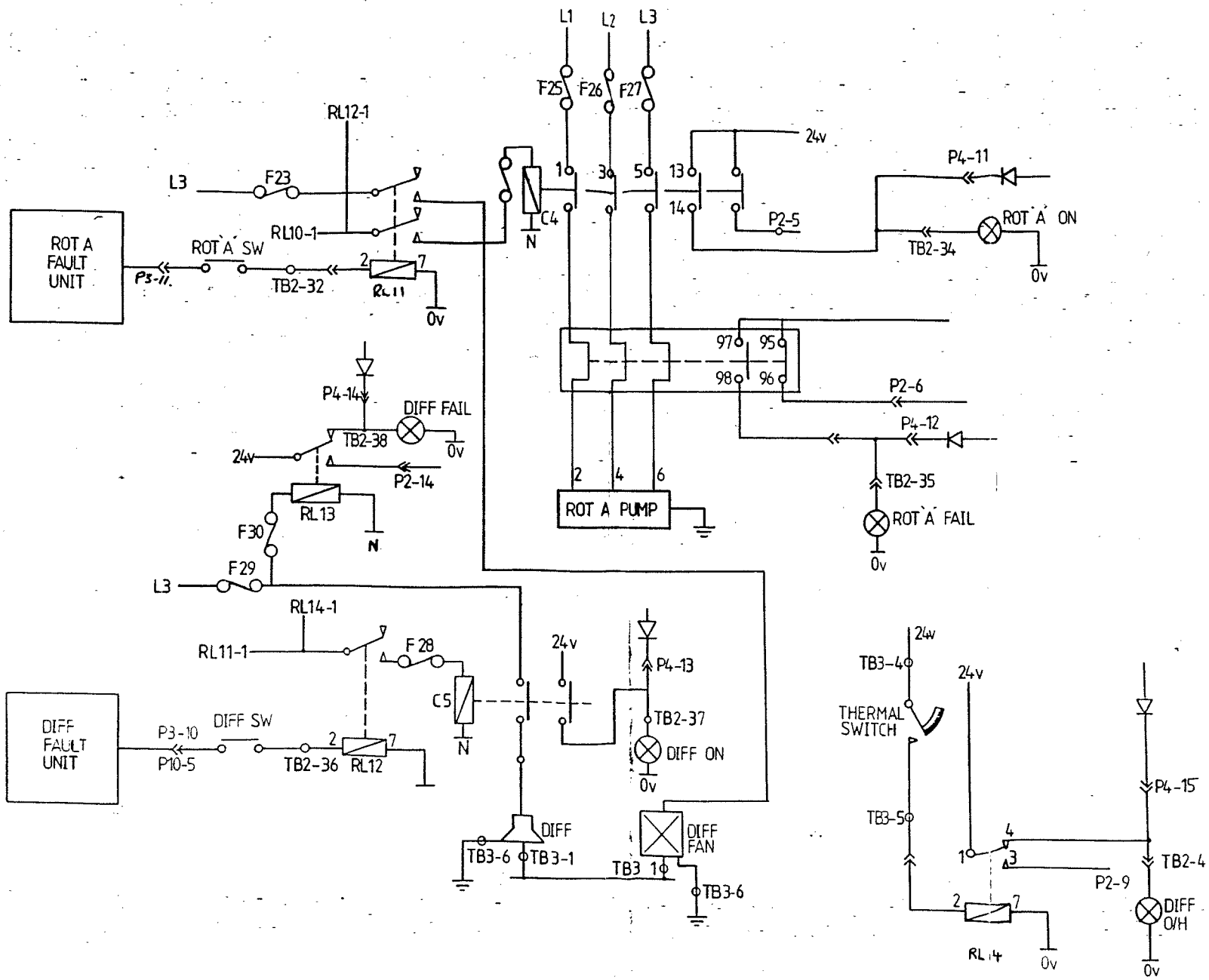
L1
L2
L3
F25
F26
F27
24v
P4-11
ROT 'A' ON
TB2-34
0v
P2-5
C4
N
RL12-1
L3
F23
RL10-1
ROT A FAULT UNIT
ROT 'A' SW
P3-11
TB2-32
RL11
0v
97
95
98
96
P2-6
P4-12
TB2-35
ROT 'A' FAIL
0v
ROT A PUMP
P4-14
DIFF FAIL
TB2-38
0v
24v
P2-14
RL13
F30
N
F29
L3
RL14-1
RL11-1
F28
C5
N
24v
P4-13
TB2-37
DIFF ON
0v
DIFF FAULT UNIT
P3-10
P10-5
DIFF SW
TB2-36
RL12
DIFF
TB3-6
TB3-1
DIFF FAN
TB3 1
TB3-6
24v
TB3-4
THERMAL SWITCH
TB3-5
24v
P4-15
TB2-4
P2-9
DIFF O/H
RL14
0v
0v

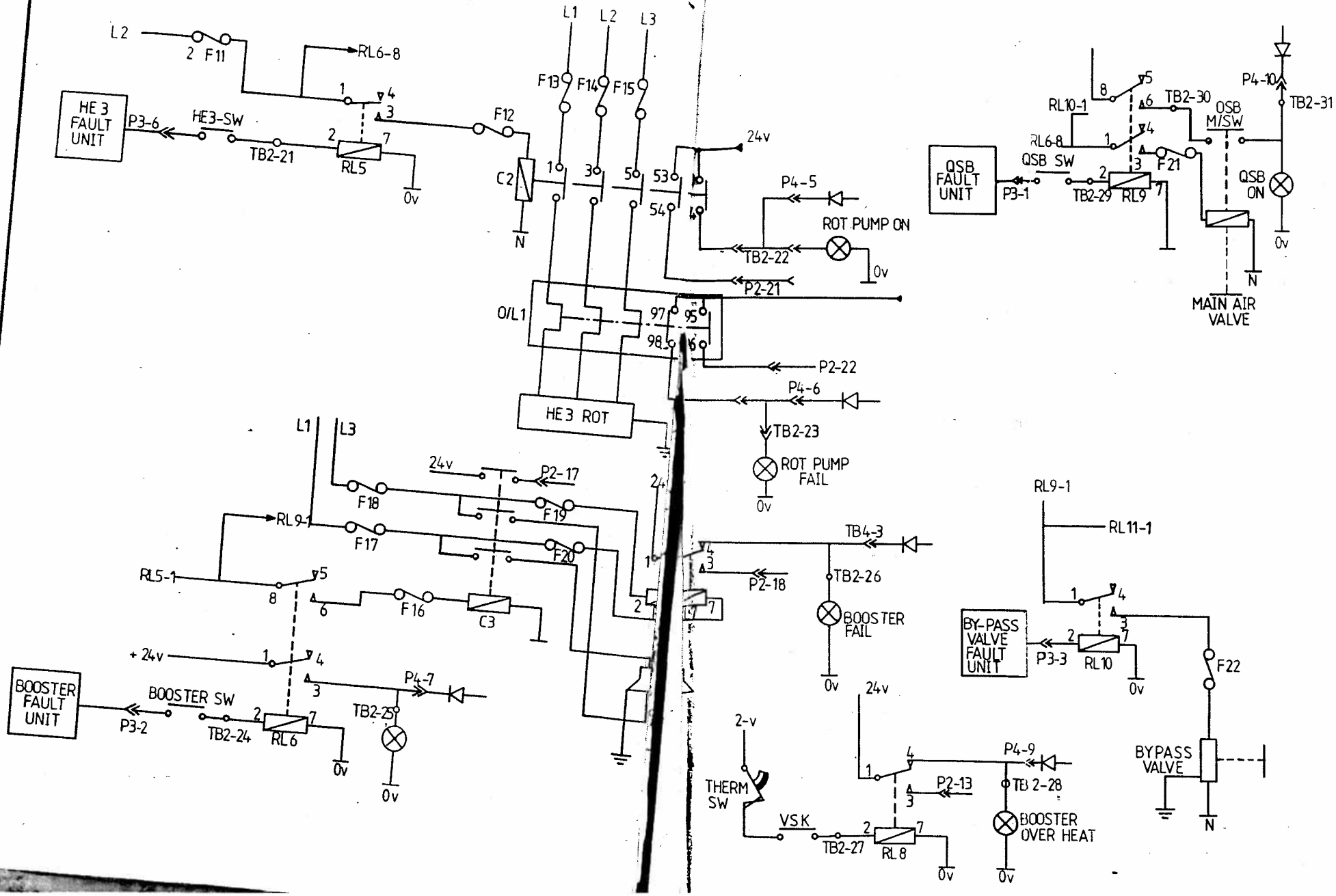
L2
2 F11
RL6-8
HE 3 FAULT UNIT
P3-6
HE3-SW
TB2-21
RL5
0v
F12
C2
N
L1
L2
L3
F13
F14
F15
24v
P4-5
ROT PUMP ON
TB2-22
0v
P2-21
O/L1
97
95
98
96
P2-22
P4-6
HE 3 ROT
TB2-23
ROT PUMP FAIL
0v
L1
L3
24v
P2-17
F18
F19
RL9-1
F17
F20
RL5-1
F16
C3
TB4-3
P2-18
TB2-26
BOOSTER FAIL
0v
+ 24v
P4-7
BOOSTER FAULT UNIT
BOOSTER SW
P3-2
TB2-24
RL6
TB2-25
0v
0v
2-v
THERM SW
VSK
TB2-27
RL8
0v
24v
P4-9
P2-13
TB 2-28
BOOSTER OVER HEAT
0v
RL9-1
RL11-1
BY-PASS VALVE FAULT UNIT
P3-3
RL10
0v
F22
BYPASS VALVE
N
QSB FAULT UNIT
P3-1
QSB SW
TB2-29
RL9
RL10-1
RL6-8
F21
TB2-30
QSB M/SW
P4-10
TB2-31
QSB ON
0v
N
MAIN AIR VALVE

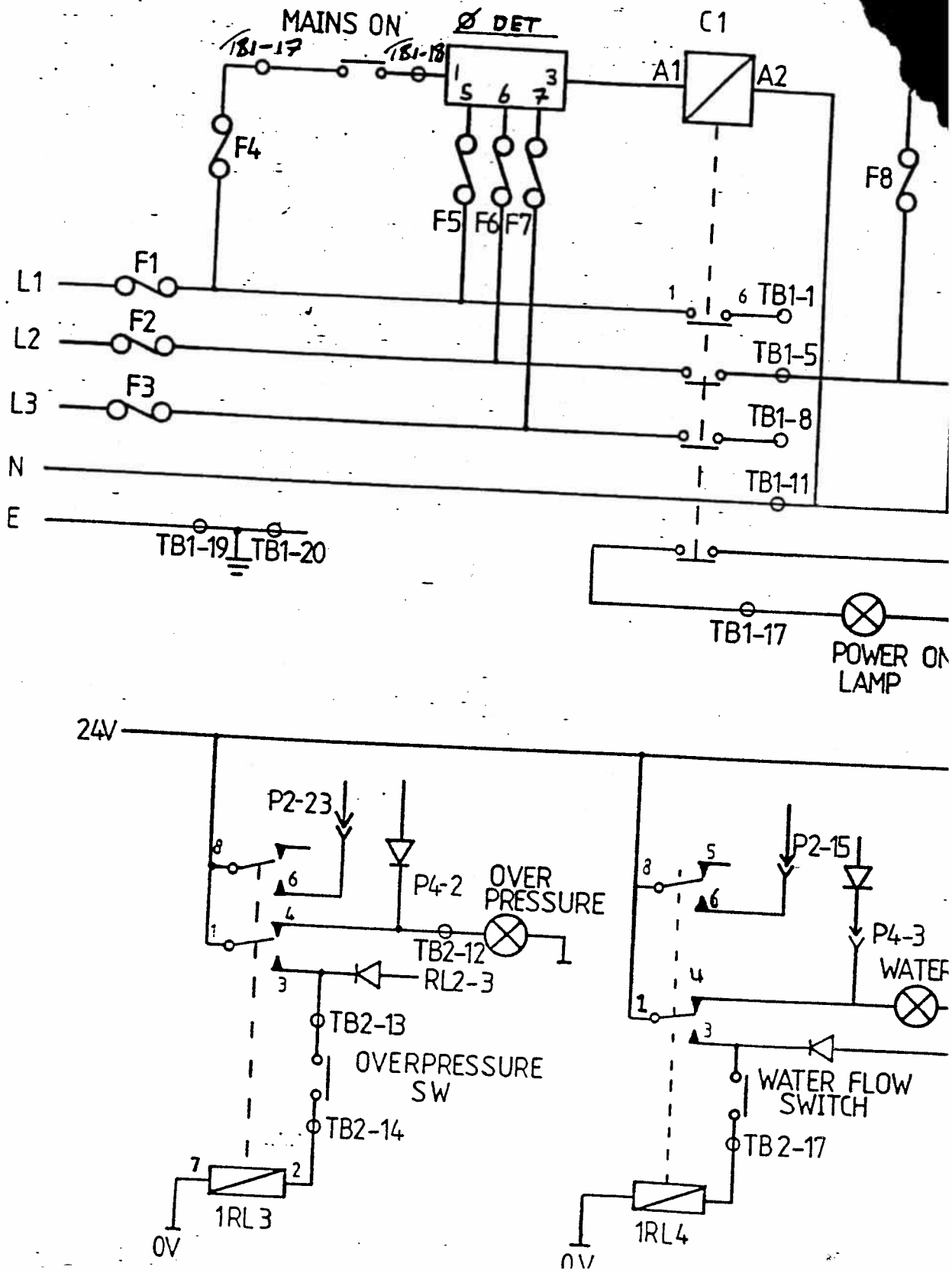
MAINS ON
Ø DET
TB1-17
TB1-18
C1
A1
A2
F4
F5
F6
F7
F8
L1
L2
L3
N
E
F1
F2
F3
TB1-1
TB1-5
TB1-8
TB1-11
TB1-19
TB1-20
TB1-17
POWER ON LAMP
24V
P2-23
P4-2
OVER PRESSURE
TB2-12
RL2-3
TB2-13
OVERPRESSURE SW
TB2-14
1RL3
0V
P2-15
P4-3
WATER
WATER FLOW SWITCH
TB2-17
1RL4
0V

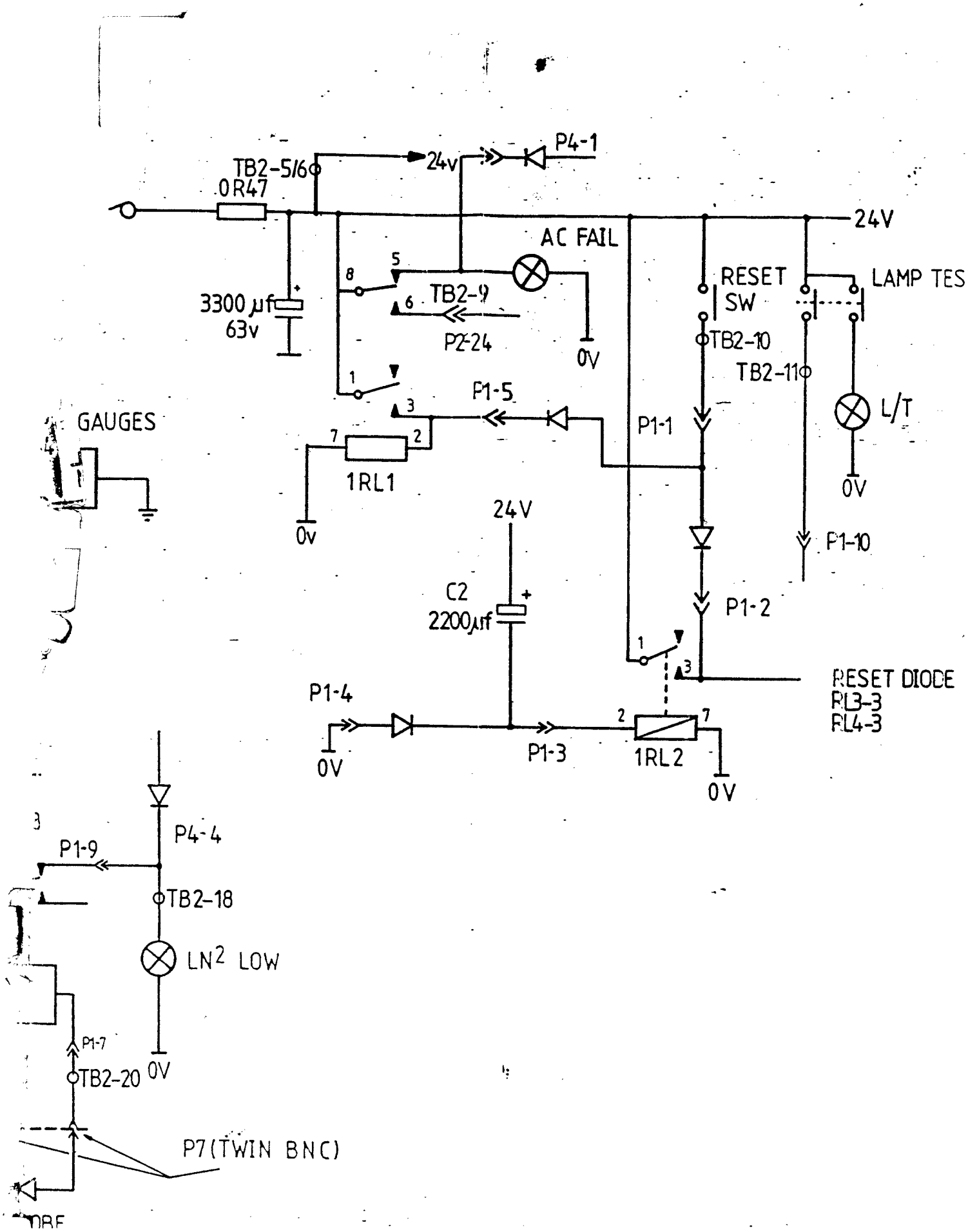
TB2-5/6
0R47
24v
P4-1
24V
AC FAIL
3300 µf
63v
TB2-9
P2-24
0V
RESET
SW
LAMP TES
TB2-10
TB2-11
L/T
0V
P1-5
P1-1
GAUGES
1RL1
0v
24V
C2
2200µf
P1-10
P1-2
RESET DIODE
RL3-3
RL4-3
P1-4
0V
P1-3
1RL2
0V
P4-4
P1-9
TB2-18
LN2 LOW
P1-7
TB2-20
0V
P7(TWIN BNC)