B411-11-880
Issue G

Instruction Manual

9B3K, 9B4K and 18B4A
Oil Vapour Booster Pumps

BOC EDWARDS

Manor Royal, Crawley, West Sussex, RH10 2LW, UK
Telephone: +44 (0) 1293 528844 Fax: +44 (0) 1293 533453
http://www.bocedwards.com

Declaration of Conformity

We, BOC Edwards,
Manor Royal,
Crawley,
West Sussex RH10 2LW, UK

declare under our sole responsibility that the product(s)

9B3K, 9B4K and 18B4A Vapour Booster Pumps:

B411-11-976	B411-10-976	B065-03-220
B411-11-977	B411-10-977	B065-03-380
B411-11-978	B411-10-978	B065-03-440

to which this declaration relates is in conformity with the following standard(s) or other normative document(s)

Pneurop 6606 Vacuum Flanges and Connections.

following the provisions of

73/023/EEC Low Voltage Directive.
89/336/EEC Electromagnetic Compatibility Directive.

Stephen E. Ormrod

Dr. S. E. Ormrod, Technical Director

11.4.00 Crawley

Date and Place

DBW 5999-483

P900-75-000 Issue F 2B01-010

BOC EDWARDS

CONTENTS

Illustrations

Tables

(This page deliberately left blank)

1 GENERAL DESCRIPTION

1.1 Scope and definitions

This manual provides installation, operation and maintenance instructions for the BOC Edwards 9B3K, 9B4K and 18B4A Vapour Booster Pumps. You must use the pumps as specified in this manual.

Read this manual before you install and operate your pump. Important safety information is highlighted as WARNING and CAUTION instructions; you must obey these instructions. The use of WARNINGS and CAUTIONS is defined below.

WARNING
Warnings are given where failure to observe the instruction could result in injury or death to people.

CAUTION
Cautions are given where failure to observe the instruction could result in damage to the equipment, associated equipment and process.

In accordance with the recommendations of IEC1010, the following warning symbols may appear on the pump or its accessories:


Caution - refer to accompanying documents


Caution - risk of electric shock

Caution - hot surfaces

The units used throughout this manual conform to the SI international system of units of measurement.

1.2 Description

The 9B3K, 9B4K and 18B4A are high-performance vapour booster pumps. The largest pump (the 18B4A) has a pumping speed of up to 6000 ls^{-1}. The pumps are rugged and reliable and have high performance even with relatively high backing pressures.

1.3 Construction

The vapour booster pump consists of vertical diffusion pump stages, backed by a horizontal ejector stage and a condenser. A cooled guard-ring around the top-jet nozzle minimises back-streaming of vapour pump fluid. The component parts of the vapour booster pumps are shown in Figures 1 to 3.

The diffusion stage has a flanged inlet-cone with top, intermediate and lower vapour-tubes, each of which has a jet-nozzle (note that there is no intermediate vapour-tube in the 9B3K pump). The top-jet is cooled by the guard-ring cooling-coil. The inlet-cone has a copper cooling-coil wound around it for optimum cooling. The diffusion stage is bolted to the ejector stage T-piece through flanges to allow easy access for cleaning.

The ejector (or booster) stage is a flanged T-piece. The ejector-nozzle (or side-nozzle) is inside this T-piece and is bolted to the side-cone. The side-cone ends in a vertical backing condenser. The side-cone and backing condenser have a cooling-coil wound around them. The ejector stage T-piece is also bolted (through flanges) to the pump-boiler assembly in the base of the pump.

The pump fluid is heated and vaporised by electric heater plate(s), one, two or three depending upon the pump model. The boiler has a dipstick/fluid filler connection and a drain-plug. The electrical supply cables from the heater are brought out to a terminal-box at the bottom of the pump for ease of connection to your electrical supply.

1.4 Principle of operation

Pump fluid is heated in the boiler to produce a vapour which passes up through the interior of the diffusion stages and emerges from the jets as high-velocity vapour streams. The vapour streams condense on the cooled pump-body wall and drain into the boiler at the bottom of the pump for recirculation.

A portion of system gas which arrives at the pump-inlet is trapped in the vapour stream from the top-jet. The gases are compressed and transferred to the next stage. This process is repeated through the pump jet stages until the gases are removed by the backing pump through the ejector stage and the cooled backing condenser.

The cooled surface of the guard-ring above the top-jet traps and condenses pump fluid vapour and so minimises the back-streaming of pump fluid vapour into the vacuum system.

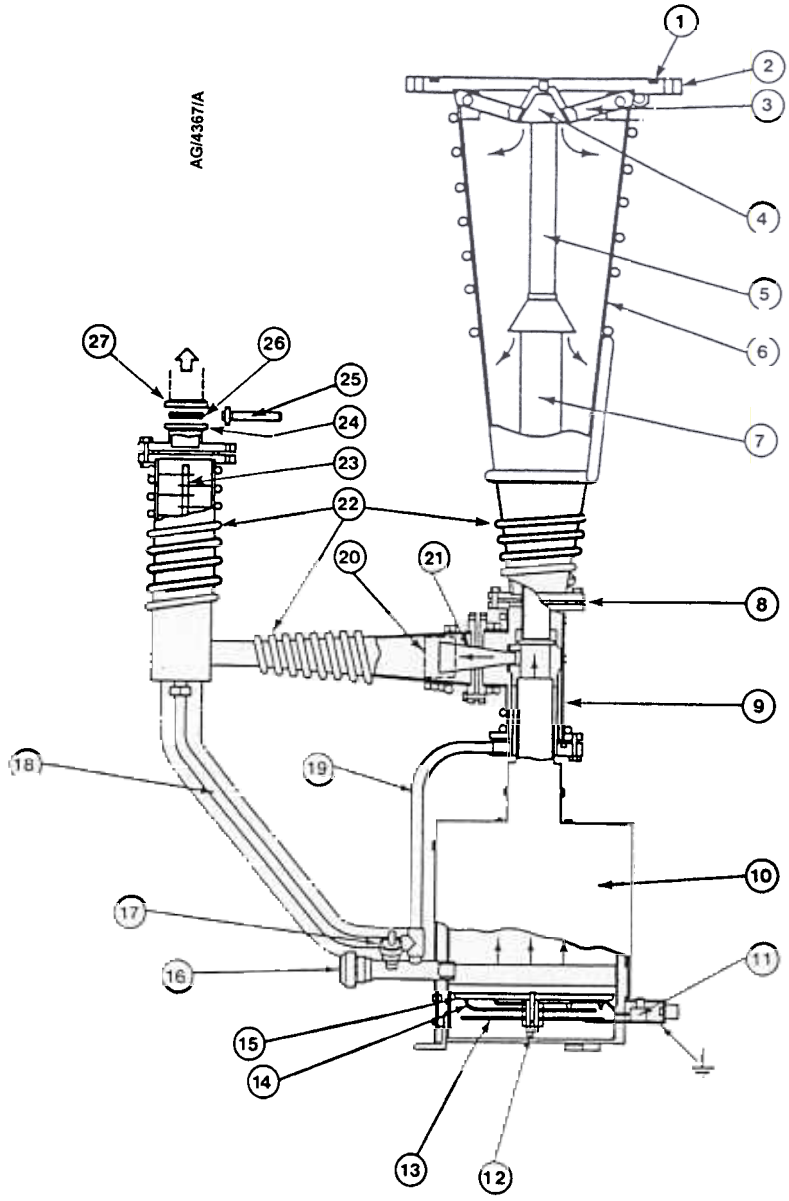

1.	'O' ring	10.	Boiler	19.	Fluid return-tube
2.	Inlet-flange	11.	Terminal-block	20.	Side-cone assembly
3.	Guard-ring	12.	Heater retaining nut	21.	Ejector jet assembly
4.	Top-jet cap	13.	Heater radiation shield	22.	Cooling-coils
5.	Top vapour-tube	14.	Clamp-plate	23.	Baffle-tube assembly
6.	Top-cone assembly	15.	Heater element	24.	Backing connection flange
7.	Lower vapour-tube	16.	Drain-connection	25.	Clamping-ring
8.	Co-Seal	17.	Dipstick	26.	Centring-ring
9.	T-piece	18.	Condenser drain-tube	27.	Blank flange

Figure 1 - 9B3K Vapour Booster Pump

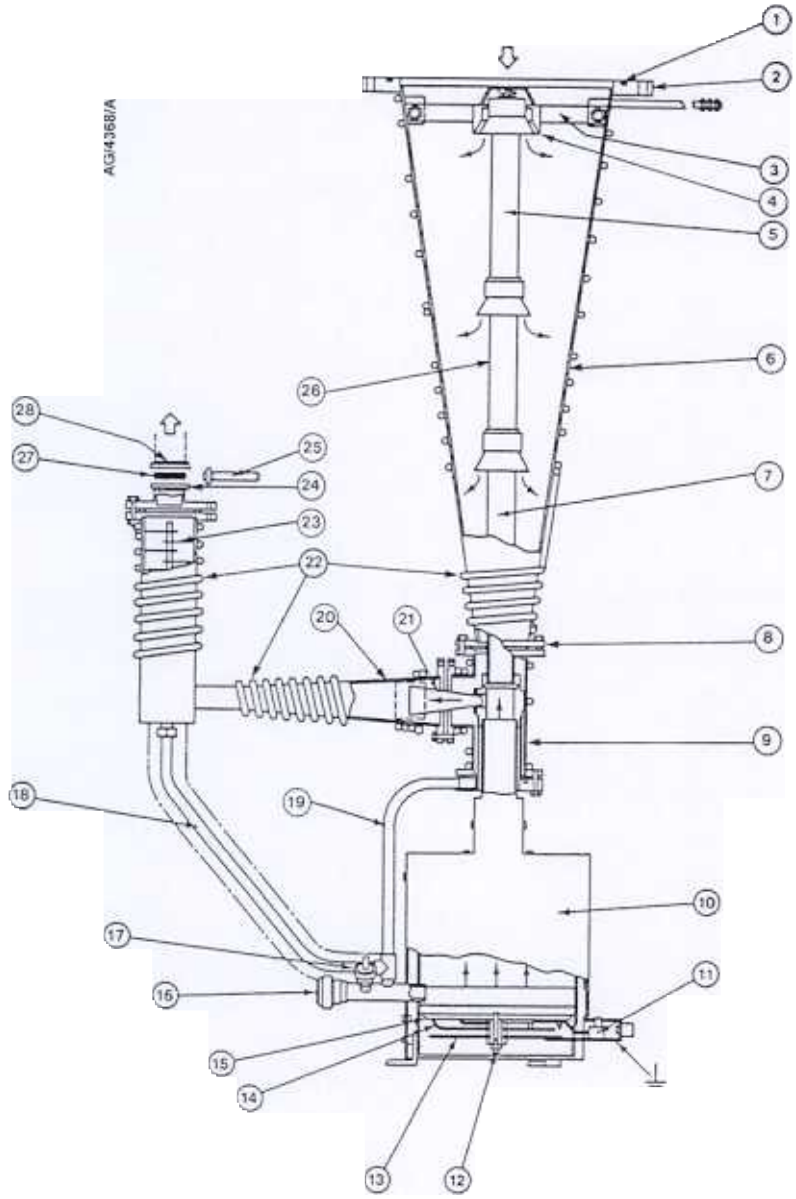

1. 'O' ring
2. Inlet-flange
3. Guard-ring
4. Top-jet cap
5. Top vapour-tube
6. Top-cone assembly
7. Lower vapour-tube
8. Co-Seal
9. T-piece
10. Boiler
11. Terminal-block
12. Heater retaining nut
13. Heater radiation shield
14. Clamp-plate
15. Heater element
16. Drain-connection
17. Dipstick
18. Condenser drain-tube
19. Fluid return-tube
20. Side-cone assembly
21. Ejector jet assembly
22. Cooling-coils
23. Baffle-tube assembly
24. Backing connection flange
25. Clamping-ring
26. 2nd-stage vapour-tube
27. Centring-ring
28. Blank flange

Figure 2 - 9B4K Vapour Booster Pump

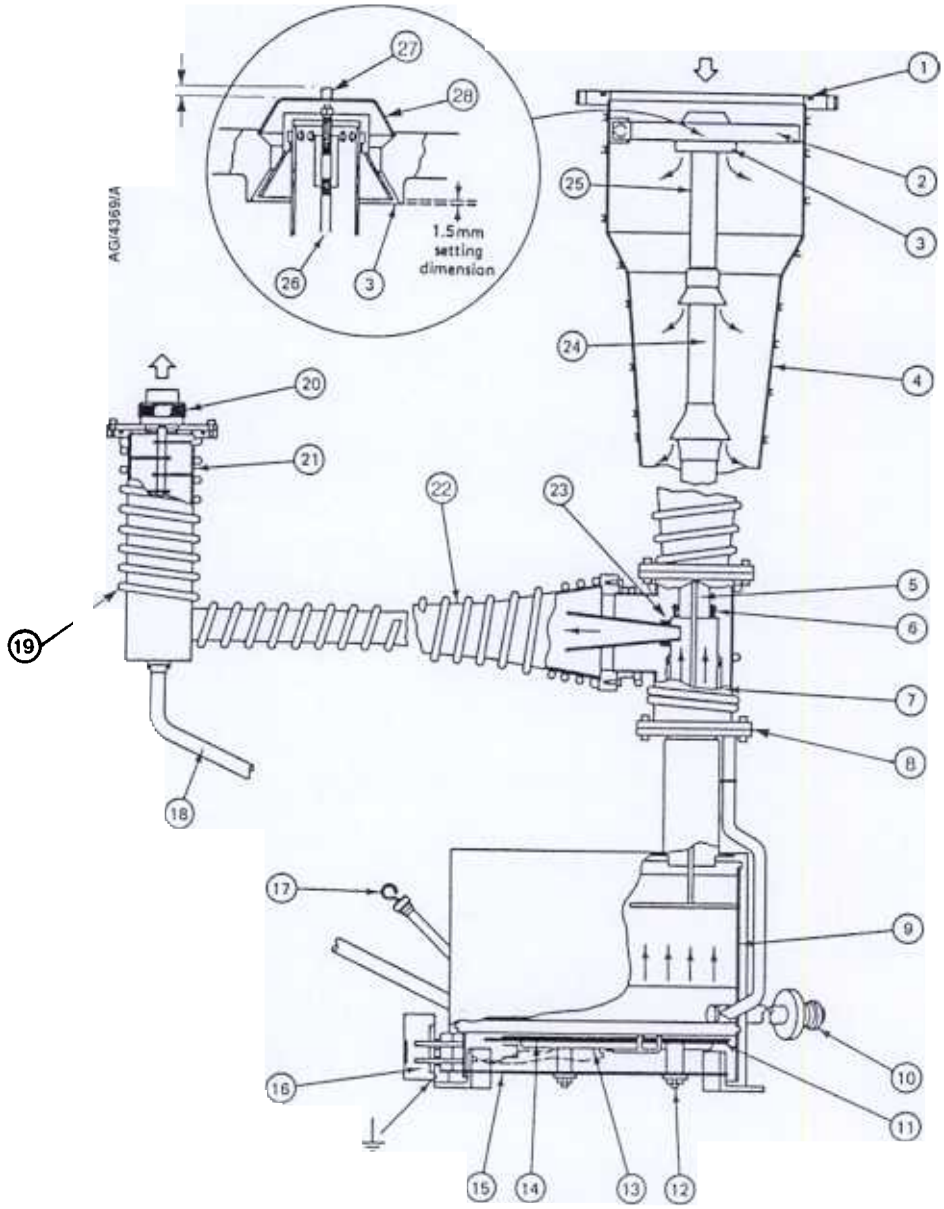

1. 'O' ring
2. Guard-ring
3. Top-jet cap
4. Top-cone assembly
5. Lower vapour-tube
6. Sealing washer
7. T-piece
8. 'O' ring
9. Boiler
10. Drain-connection
11. Heater element
12. Nut
13. Clamp-plate
14. Radiation shield
15. Cover
16. Terminal-box
17. Dipstick
18. Condenser drain-tube
19. Cooling-coil
20. Backing connection
21. Baffle-tube assembly
22. Side-cone assembly
23. Ejector-jet assembly
24. 2nd-stage vapour-tube
25. Top vapour-tube
26. Vapour-tube radiation shield
27. Location pin
28. Cooled-cap

Figure 3 - 18B4A Vapour Booster Pump

2 TECHNICAL DATA

2.1 9B3K pump

Pumping speed	
air	850 ls^{-1} ISO
hydrogen	1800 ls^{-1}
Performance (with AP201 fluid)	
Critical backing pressure	2 to 2.4 mbar, 2×10^2 to 2.4×10^2 Pa
Ultimate vacuum	better than 5×10^{-5} mbar, 5×10^{-3} Pa
Maximum system pressure	1.3×10^3 mbar, 1.3×10^5 Pa
Recommended fluid type	see Section 3.11
Fluid charge	1.5 litres
Minimum backing pump displacement	27 m^3h^{-1}
Recommended backing pump	BOC Edwards E1M40
Backing connection	NW40
Cooling-water connection (supplied)	$^3/_8$ inch compression fitting
Minimum cooling-water flow at 20 °C	180 lh^{-1}
Heater power	2.25 kW
Mass	47 kg

2.2 9B4K pump

Pumping speed	
air	3800 ls^{-1} ISO
hydrogen	5000 ls^{-1}
Performance (with AP201 fluid)	
Critical backing pressure	2 to 2.4 mbar, 2×10^2 to 2.4×10^2 Pa
Ultimate vacuum	better than 5×10^{-5} mbar, 5×10^{-3} Pa
Maximum system pressure	1.3×10^3 mbar, 1.3×10^5 Pa
Recommended fluid type	see Section 3.11
Fluid charge	1.5 litres
Minimum backing pump displacement	27 m^3h^{-1}
Recommended backing pump	BOC Edwards E1M40
Backing connection	NW40
Cooling-water connection (supplied)	$^3/_8$ inch compression fitting
Minimum cooling-water flow at 20 °C	180 lh^{-1}
Heater power	2.25 kW
Mass	63 kg

2.3 18B4A pump

Pumping speed	
air	4000 ls^{-1} ISO
hydrogen	6000 ls^{-1}
Performance (with AP201 fluid)	
Critical backing pressure	2 to 2.6 mbar, 2×10^2 to 2.6×10^2 Pa
Ultimate vacuum	better than 5×10^{-5} mbar, 5×10^{-3} Pa
Maximum system pressure	1.3×10^3 mbar, 1.3×10^5 Pa
Recommended fluid type	see Section 3.11
Fluid charge	10 litres
Minimum backing pump displacement	190 m^3h^{-1}
Recommended backing pump	BOC Edwards E1M275
Backing connection	2 inch union or ISO 063 flange
Cooling-water connection	$^1/_2$ inch BSP
Minimum cooling-water flow at 20 °C	420 lh^{-1}
Heater power	6.0 kW
Mass	165 kg

2.4 Pump fluid data

Note: BOC Edwards Material Safety Data Sheets for the following fluids are available on request.

Fluid Type	Flash point °C	Auto-ignition point °C	Molecular weight
DC704EU	221	500	484
Apiezon AP201	196	305	310

2.5 Construction materials

Pump-body	Nickel plated/painted mild steel
Frame and panels	Mild steel
Water-cooling coils	High-conductivity copper
Inlet and backing 'O' rings	Nitrile
Internal pump 'O' rings	Fluoroelastomer
Sealing washer	Aramid fibre in nitrile rubber binder

2.6 Product Item Numbers

Pump	Electrical supply	Item Number
	110-125 V, 1-phase, 50/60 Hz	B411-11-976
	210-225 V, 1-phase, 50/60 Hz	B411-11-977
	230-250 V, 1-phase, 50/60 Hz	B411-11-978
	110-125 V, 1-phase, 50/60 Hz	B411-10-976
	210-225 V, 1-phase, 50/60 Hz	B411-10-977
	230-250 V, 1-phase, 50/60 Hz	B411-10-978
18B4A	200-210 V, 3-phase, 50/60 Hz Delta	B065-03-200
	220-230 V, 3-phase, 50/60 Hz Delta	B065-03-220
	240-250 V, 3-phase, 50/60 Hz Delta	B065-03-240
	380-400 V, 3-phase, 50/60 Hz Star	B065-03-380
	415-440 V, 3-phase, 50/60 Hz Star	B065-03-440
	460-480 V, 3-phase, 50/60 Hz Star	B065-03-480

3 INSTALLATION

3.1 Safety

WARNING

Obey the safety instructions given below and take note of appropriate precautions. If you do not, you can cause injury to people and damage to equipment.

- A suitably trained and supervised technician must install the pump.

  Isolate the other components in the vacuum system from the electrical supply before you start work.

  Use suitable lifting equipment when you move the pump.

  Ensure that the installation technician is familiar with the safety precautions which relate to the products handled by the pumping system.

  Ensure that the products handled by the pumping system are compatible with the materials of construction of the pump (see Section 2.5). If you have any doubts about the compatibility, contact your supplier or BOC Edwards for advice.

- Do not use solvents to clean 'O' rings.

  Vent and purge the vacuum system with nitrogen for 15 minutes before you start installation work.

3.2 Unpack and inspect

Remove all packing material and protective covers and check the pump. If the pump is damaged, notify your supplier and the carrier in writing within three days; state the Item Number of the pump together with your order number and your supplier's invoice number. Retain all packing materials for inspection. Do not use the pump if it is damaged.

Check that your package contains a fitting pack. If the fitting pack is missing, notify your supplier in writing within three days.

If the pump is not to be used immediately, replace the protective covers and store the pump in suitable conditions as described in Section 6.1.

3.3 Locate the pump

WARNING

Use suitable lifting-gear to locate the pump. Refer to Section 2 for the mass of the pump.

WARNING

Ensure that you do not damage the terminal box when you locate the 18B4A pump in its operating location.

WARNING

Ensure that you do not operate the 18B4A pump with the heater support under the base of the pump. If you do, there will be a risk of fire.

WARNING

Surfaces of the pump are hot during operation. Install the pump so that you cannot accidentally touch the hot surfaces of the pump.

The pump is designed to operate with the inlet-flange horizontal and uppermost. Use the following procedure to locate the pump a practical working distance from suitable electrical and cooling-water supplies:

Use suitable lifting-gear to lift the pump from its pallet. On the 18B4A pump: ensure that the pump disengages from the heater support, which should remain attached to the pallet. If the heater support becomes detached from the pallet and remains engaged with the base of the pump, the heater support may catch fire when you operate the pump.

2. Move the pump close to its required operating location, then carefully lower the pump into its operating location. On the 18B4A pump: take care not to damage the terminal box when you lower the pump.

3. Use the securing-lugs at the base of the pump to fix the pump in position.

Note that surfaces of the pump can get very hot during operation. Ensure that people cannot accidentally touch the hot surfaces of the pump. If necessary, fit guard rails.

3.4 Pump-inlet connections

Some of the components required to install the pump are supplied in the fitting pack. The Item Numbers of accessories are given in Section 7. Take note of the following when you connect the pump-inlet:

The pump is tested with AP201 fluid before delivery. Internal surfaces of the pump are therefore covered with a thin film of AP201 fluid. Use acetone or another suitable cleaning solution to clean the pump flanges before you connect the pump to your vacuum system (see Section 5).

- Cover all Co-Seals, centring-rings and 'O' rings with a light wipe of pump fluid or vacuum grease before you connect the pump.

  Connecting pipelines should be as short as possible and have the largest possible diameter.

  We recommend that you fit a combined baffle and isolation-valve to the pump (refer to Section 7). A baffle-valve minimises the back-streaming of pump fluid into your vacuum system. This back-streaming is unacceptable in some applications.

Use the 'O' ring supplied to connect the pump inlet-flange to your vacuum system.

3.5 Backing connections

WARNING

If you will pump dangerous substances, you must fit a backing pressure-interlock.

Take note of the following when you connect the backing flange:

On all applications, we recommend that you fit a pressure-interlock to the backing pipeline to switch off the electrical supply to the pump heaters if the pressure in the pipeline rises to the critical backing pressure. You **must** fit a backing pressure-interlock if you will pump dangerous substances. If you do not fit a pressure-interlock and the pressure in the backing pipeline rises to the critical backing pressure, fluid will backstream into the vacuum system and thermal breakdown of the pump fluid may occur (refer to Section 3.11). Note that if you have a suitable backing pressure gauge, you may be able to use the gauge to provide the necessary pressure signal for the pressure-interlock.

Cover all Co-Seals, centring-rings and 'O' rings with a light wipe of pump fluid or vacuum grease before you connect the pump.

Connecting pipelines should be as short as possible and have the largest possible diameter.

Adequately support the backing pipeline, to stop the transmission of stress to the backing connection.

(Continued on page 12)

Connect the backing flange as follows:

- On 9B3K and 9B4K pumps, use an NW40 fitting and the centring-ring and 'O' ring supplied to connect the backing flange. An NW40 blanking flange suitable for 42 mm external diameter tube is also supplied. If necessary, you can bore out the blanking flange to suit your pipeline.

  On 18B4A pumps, use a 2 inch union to connect the backing flange.

3.6 Cooling-water connections

Note: The minimum cooling-water flow given in Section 2 is calculated for a 10 °C temperature rise, thus, with a high water-inlet temperature it may be necessary to increase the flow to maintain the outlet temperature below 35 °C. Do not exceed this temperature otherwise the thermal snap-switch (if fitted) may operate to switch off the pump and fluid loss to the backing pipeline will increase. High cooling-water temperatures should not have any appreciable effect on pump performance except to increase the vapour pressure of the fluid which will limit the ultimate vacuum that can be obtained.

On 9B3K and 9B4K pumps, use the $^3/_8$ inch compression fittings supplied to connect your water-inlet and water-outlet pipelines to the pump. On 18B4A pumps, use a $^1/_2$ inch BSPT connection to connect your water-inlet and water-outlet pipelines to the $^1/_2$ inch BSP water block on the pump.

Connect the water-inlet connection to the pipe at the top of the pump inlet-cone so that the water flows down the pump-body and out through the pipe on the backing condenser. Maintain the water-inlet temperature as low as possible, preferably below 25 °C. Ensure that the cooling-water flow is satisfactory before you switch the pump heater on.

3.7 Pump fluid drain-connections

If required, connect a suitable pipeline to the pump fluid drain-connection.

The drain-connection on the 9B3K and 9B4K pumps is at the end of the tailpiece on the front of the pump-boiler and close to the T-piece which joins the fluid-trap drain-tube to the condenser drain-tube (see Figure 4). The dipstick forms part of the drain-connection assembly.

The drain-connection on the 18B4A pump is on the opposite side of the pump-boiler to the dipstick and the condenser (see Figure 5).

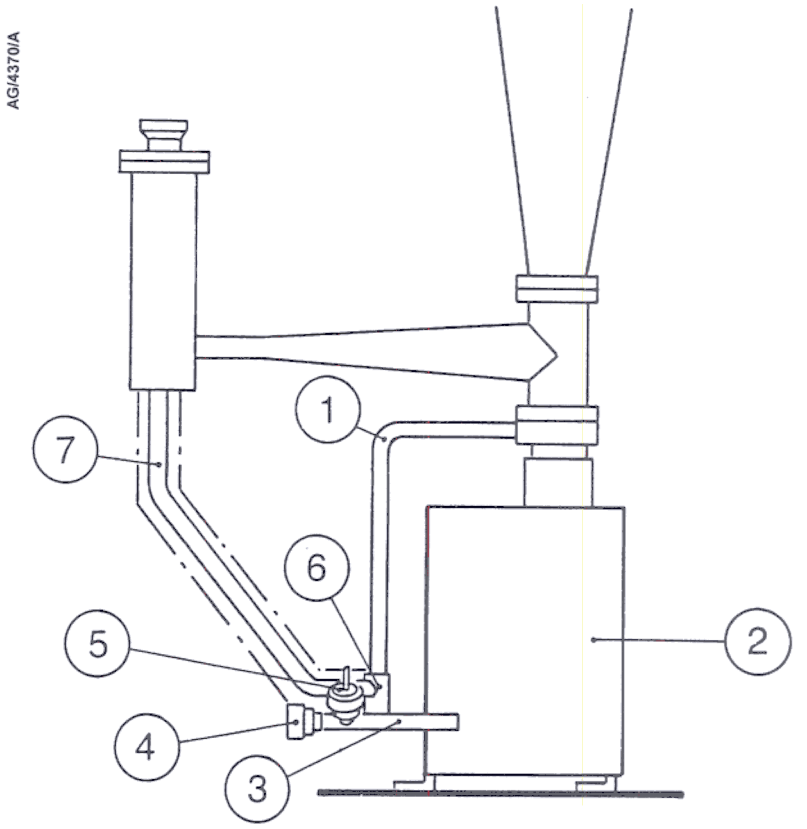

1. Fluid-trap drain-tube
2. Pump-boiler
3. Tailpiece
4. Drain-connection
5. Dipstick
6. T-piece
7. Condenser drain-tube

Figure 4 - 9B3K and 9B4K drain-connections

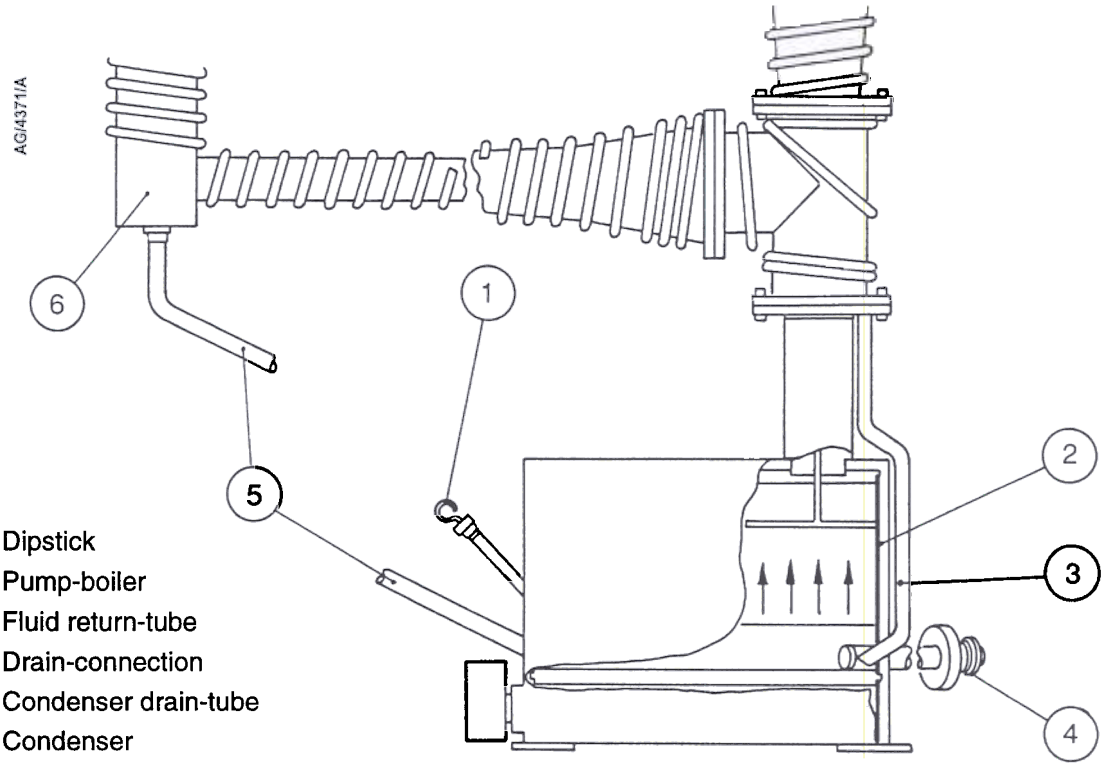

1. Dipstick
2. Pump-boiler
3. Fluid return-tube
4. Drain-connection
5. Condenser drain-tube
6. Condenser

Figure 5 - 18B4A drain-connection

3.8 Connect the electrical supply to the pump

Safety

WARNING

Ensure that the electrical installation of the pump conforms with your local and national safety requirements. The pump must be connected to a suitable fused and protected electrical supply and a suitable earth (ground) point.

You must use a suitable isolator with an over-current trip to connect the electrical supply to the pump. Use a cable of suitable rating for the total heater loading (see Section 2). We recommend that you use conduit to connect the electrical supply.

For additional electrical safety:

Fit an RCCB (residual current circuit breaker).

Incorporate suitable fuses in your electrical supply.

If you do not use conduit for the electrical installation, use cable which is heat resistant (up to 200 °C) in case of accidental contact with the pump.

Fit an emergency stop button, so that you can easily shut-down the pump in an emergency.

Check the earth (ground) resistance of the pump electrical supply before you switch it on

Check the insulation resistance of the pump heaters

WARNING

If you connect the pump to the electrical supply when the insulation resistance of the pump heaters is less than 1 MΩ, the earth leakage current could cause injury to people.

If the pump has been transported or stored in an environment with high humidity, the pump heaters may have absorbed water. This can result in a temporary reduction of the insulation resistance of the heaters.

Use the following procedure to check the insulation resistance of the heaters before you connect the electrical supply to the pump.

Measure the insulation resistance at 500 V d.c. between the pump-body and the heater connections.

2. If the resistance is 1 MΩ or lower, we recommend that you continue at Step 3 below to dry the heaters before you continue with the electrical installation of the pump.

3. To dry the heaters, use either of the following procedures:

   Put the pump in a warm dry environment for a few days.

   Remove the heaters from the pump, place the heaters in an oven at a temperature of 120 °C for approximately eight hours, then refit the heaters to the pump.

3.8.3 Connect the electrical supply to 9B3K and 9B4K pumps

These pumps are for use with a single-phase electrical supply. The two pump heater elements are connected to each other and to the terminal-box at the side of the pump-boiler by pure nickel wire. Make the electrical connections as described below.

1 Check that the electrical supply voltage corresponds with the voltage shown on the pump data plate.

2. Connect the electrical supply cable from a suitable isolator to the terminal-block. Securely connect the earth (ground) to the earth (ground) screw in the terminal-box.

3.8.4 Connect a three-phase electrical supply to 18B4A pumps

Connect the 18B4A pump to a three-phase electrical supply as described below. Refer to Figure 6 which shows the heater wiring connections. The terminal numbers in Figure 6 are the same as those in Figure 7 which shows the terminal-block.

1 Check that the electrical supply voltage corresponds with the voltage shown on the pump data plate.

2. Check the type of connection (that is, Delta or Star), then position the terminal-block links and connect the electrical supply:

   For 380-400 V, 415-440 V or 460-480 V three-phase Star connection, position the terminal-block links as shown in Figure 8 and connect the electrical supply to the heaters as shown in Figure 9.

   For 200-210 V, 220-230 V or 240-250 V three-phase Delta connection, position the terminal-block links as shown in Figure 10 and connect the electrical supply to the heaters as shown in Figure 11.

3. Connect the earth (ground) wire to the main earth (ground) stud in the electrical box.

4. Ensure that the earth (ground) wires on the terminal block cover and the electrical box cover are properly secured to the two earth (ground) points on the bottom of the electrical box.

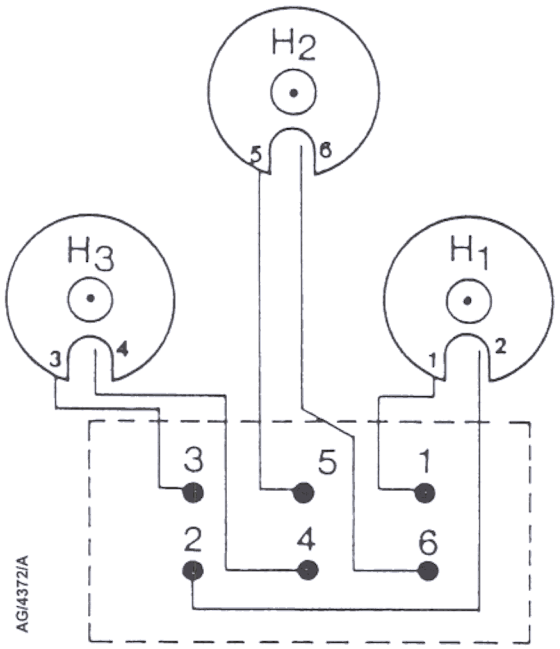

Figure 6 - 18B4A heater wiring connections

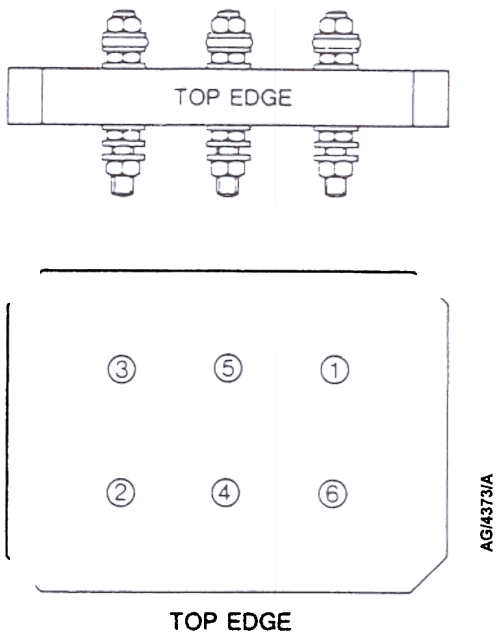

Figure 7 - 18B4A terminal-block

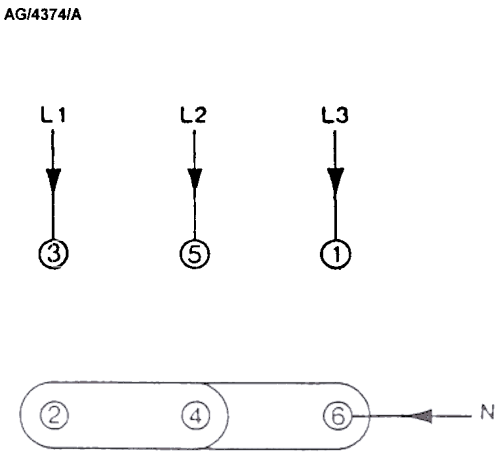

Figure 8 - 18B4A terminal-block links for Star connections

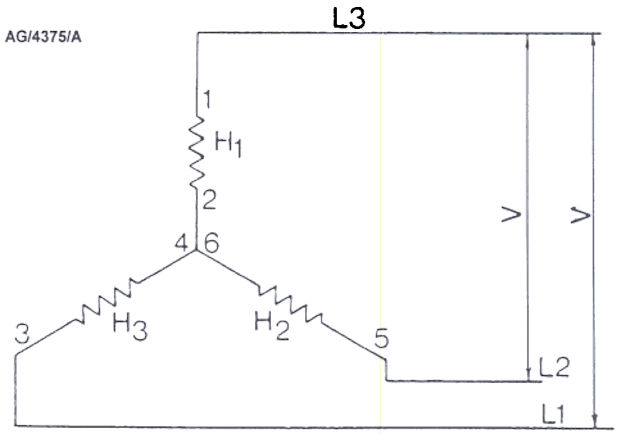

Figure 9 - 18B4A three-phase (Star) connection wiring diagram

3.8.5 Connect a single-phase electrical supply to 18B4A pumps

If you want to operate an 18B4A pump with a single-phase electrical supply, the supply voltage must be in the range 110 to 250 V. Use the following procedure.

1. Check that the electrical supply voltage is the same as that shown on the pump data plate.
2. Position the terminal-block links as shown in Figure 12 and connect the electrical supply to the heaters as shown in Figure 13.
3. Connect the earth (ground) wire to the main earth (ground) stud in the electrical box.
4. Ensure that the earth (ground) wires on the terminal block cover and the electrical box cover are properly secured to the two earth (ground) points on the bottom of the electrical box.

Fit and connect the thermal snap-switches (optional)

WARNING

The thermal snap-switches must be connected to a suitable electrical earth (ground) point.

WARNING

You must connect the outputs of the thermal snap-switches to switch off the electrical supply to the pump if any of the thermal snap-switches open. If you do not, the pump may overheat and the pump fluid may undergo thermal breakdown.

Cooling-fail thermal snap-switch

The cooling-fail thermal snap-switch is an optional accessory (refer to Section 7 for Item Numbers). The thermal snap-switch protects the pump against damage due to failure of the cooling-water supply. If the temperature of the pump increases above the normal operating level, the switch will operate to disconnect the heaters from the electrical supply. The switch automatically resets when the temperature of the pump returns to normal. The operating temperature of the thermal snap-switch is preset during manufacture. The switch can be mounted on one of the fixing plates which are permanently attached to the cooling-coils on the side and top-cones of the pump. The switch may be wired in series with a boiler protection thermal snap-switch (see Section 3.9.2).

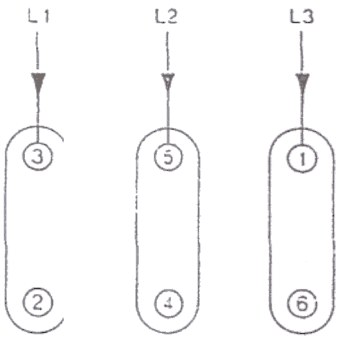

Figure 10 - 18B4A terminal-block links for Delta connections

AG/4377/A

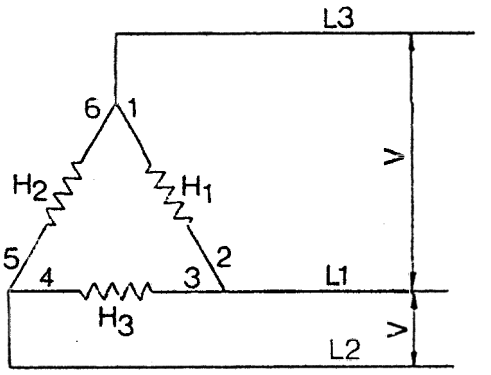

Figure 11 - 18B4A three-phase (Delta) connection wiring diagram

AG/4378/A

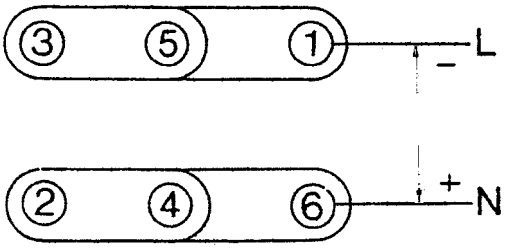

Figure 12 - 18B4A terminal-block links for single-phase operation

AG/4379/A

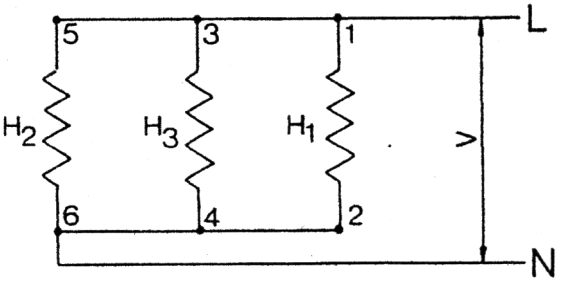

Figure 13 - 18B4A single-phase connection wiring diagram

Boiler Protection thermal snap-switch

> WARNING
>
> Ensure that the boiler protection thermal snap-switch is correctly adjusted. If it is not, the pump may overheat and the boiler may implode.

The boiler protection thermal snap-switch is fitted on the 18B4A pump-boiler cover and can be wired in series with a water flow thermal snap-switch. A boiler protection thermal snap-switch is not available for the 9B3K and 9B4K pumps.

The thermal snap-switch protects the 18B4A pump against overheating due to a low level of pump fluid in the boiler. The switch will operate at a preset temperature and can be used with a contactor/relay to disconnect the heaters from the electrical supply.

3.10 Leak-test the system

After you have installed the pump, leak-test the system before you fill the pump with fluid. The pump fluid is viscous at ambient temperature and may block small leaks and the fluid may outgas and give false test results.

The level of leak tightness required will depend on the application of the system. You must leak-test the system to ensure the integrity of the system and its vacuum seals.

3.11 Fill the pump with fluid

Safety of vapour pump fluids

Vapour pump fluids are not dangerous when used in a pump that is operated correctly. But if the pump is operated incorrectly and is allowed to get to very high temperatures, the pump fluid can go through a process of thermal breakdown. The breakdown products which result can be dangerous. Table 1 gives more information about the thermal breakdown of the different vapour pump fluids. Thermal breakdown is more likely to occur if the breakdown temperature is close to the operating temperature of your pump.

3.11.2 Recommended pump fluids

> WARNING
>
> Do not use perfluoropolyether (PFPE) pump fluids in the 9B3K, 9B4K or 18B4A pumps. The thermal breakdown temperature of PFPE fluids is near to the operating temperature of these pumps. PFPE fluid thermal breakdown products are very dangerous.

Take note of the information given in Table 1 about the thermal breakdown temperature and decomposition products of the various pump fluids.

(Continued on page 20)

Choose the best fluid for your application. We recommend Apiezon AP201 fluid for use in the 9B3K, 9B4K and 18B4A Vapour Booster Pumps. Please consult BOC Edwards or your supplier if you wish to use other fluids.

Thermal snap-switches are available as accessories (see Section 7). We recommend that you fit these thermal snap-switches to prevent the pump from overheating if the cooling-water supply fails or if the pump fluid level is low.

Vapour pump fluid	BOC Edwards Product	Auto-ignition Temp. °C	Break-down Temp °C	Thermal breakdown products	Type of danger	Possible injury
Silicone fluids (methyl phenyl siloxanes)	DC702, DC704EU, DC705	≈ 500	400	Decomposed hydrocarbons and silicon based species	Negligible	Negligible
Alkyl naphthalene fluid	BOC Edwards L9	70	≈ 300	Naphthalene and decomposed hydrocarbons	Naphthalene is poisonous in large quantities by ingestion and skin contact	Minor (first aid may be required)
Polyphenyl ether (5-Ring)	Santovac 5	590	≈ 460 (in helium)	Phenol, benzene & phenolic materials	Phenolic materials are poisonous & caustic by ingestion and skin contact	Major (a lost time accident can occur)
Paraffinic fluids & ester fluids	Apiezon A, B, C, AP201 and AP301	≥ 305	< 300 (in air)	Decomposed hydrocarbons	Fire (Note: AP201 has a low auto-ignition temperature)	Major (a lost time accident can occur)
Perfluoro-polyether	None	None	> 260	Decomposed fluorocarbons including hydrofluoric acid	Highly aggressive materials. Poisonous and caustic by inhalation and skin contact.	Potentially fatal

Table 1 - Pump fluid thermal breakdown

3.11.3 Filling procedure

Use the best fluid for your application. The pump is tested with AP201 pump fluid and will contains traces of this pump fluid when supplied. You must refill the pump with the same type of fluid. If you wish to use a different fluid, you must clean the pump thoroughly before you fill it with the different fluid.

Fill the pump with fluid as described below.

1 Check that the drain-plug is securely tightened.

Pour the required amount of fluid (see Sections 2.1 to 2.3) into a clean container.

3. Remove the dipstick and the 'O' ring seal.

4. Pour the fluid through a funnel and into the pump to fill the pump with fluid, then check the level with the dipstick.

5. When the level is correct (indicated when the fluid level is shown on the upper mark on the dipstick), replace the dipstick and the 'O' ring seal.

4 OPERATION

Introduction

WARNING

If the cooling-water supply fails during operation, steam or water may be ejected from the couplings if they are disconnected. If the cooling-water supply fails, allow the pump to cool before you disconnect the couplings, or you may be injured.

WARNING

Do not touch the pump when it is hot; avoid any contact between the pump and combustible materials, plastics or electrical cables. The surfaces of the heater, outlet condenser and radiation shield are very hot.

The following sections are applicable to pumps which are operated in conjunction with a fully valved pumping system as shown in Figure 14.

Details of the baffle and isolation-valves recommended for use in these pumping systems are given in Section 7.

Pump start-up

The following procedure assumes that the pump and your vacuum system are at atmospheric pressure.

1. Close the baffle-valve and air-admittance valve(s). Close any other openings to atmospheric pressure.

   Open the backing pump isolation-valves.

3. Switch on the cooling-water supply to the vapour booster pump, then switch on the backing pump.

4. When the backing pressure reaches 1.3 mbar (1.3×10^2 Pa) or lower, switch on the electrical supply to the vapour booster pump.

5. Leave the pump to warm-up for 40 to 60 minutes.

6. Close the backing valve, then open the roughing valve.

7. When a system pressure of 0.2 mbar (2×10^1 Pa) or lower is reached, close the roughing valve and open the backing valve.

8. Open the high-vacuum baffle-valve.

4.3 Rough pumping

If you have a large vacuum system and rough pumping takes a considerable time, then a small holding pump and valve may be necessary to back the booster pump during roughing. With the holding pump installed, proceed as follows:

1 Use the procedure in Steps 1 to 5 of Section 4.2 above.

2. Switch on the holding pump and open the holding isolation-valve.

3. Close the backing valve and open the roughing valve.

4. Pump down the system to 0.2 mbar (2×10^1 Pa) or lower, close the roughing valve and open the backing valve.

5. Open the high-vacuum baffle-valve.

6. Close the holding valve and switch off the holding pump.

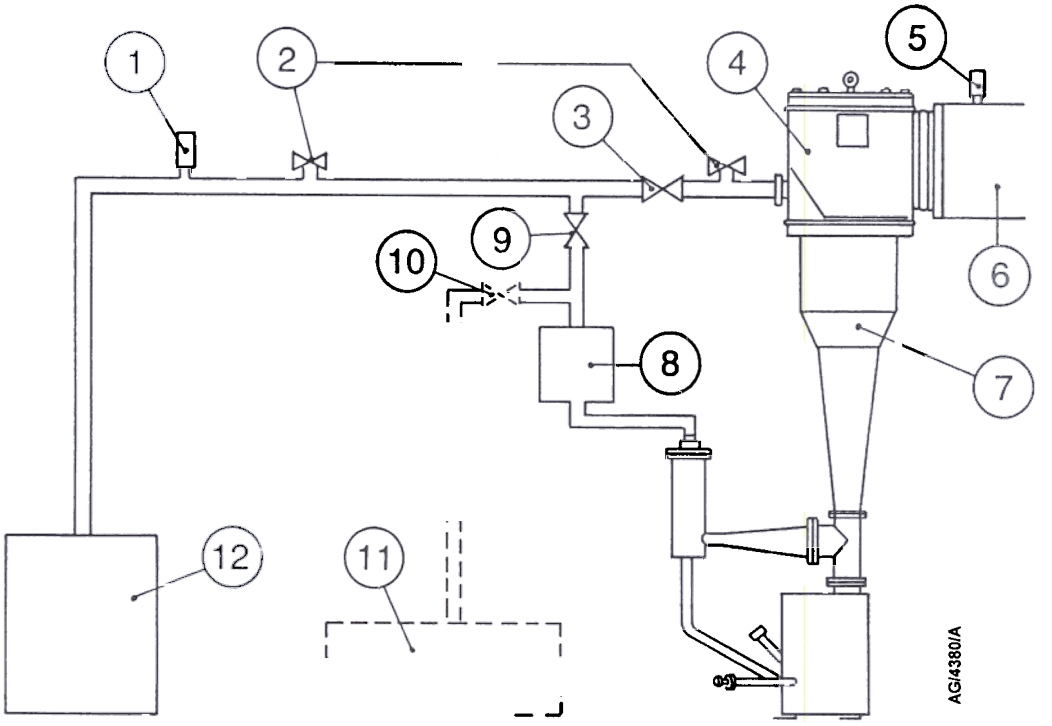

1.	Backing gauge head	5.	High-vacuum gauge head	9.	Backing valve
2.	Pump air-admittance valve	6.	Work chamber	10.	Holding valve
3.	Roughing valve	7.	Vapour booster pump	11.	Holding pump
4.	High-vacuum baffle-valve	8.	Moisture trap	12.	Backing pump

Figure 14 - Typical pumping system

4.4 Re-admission of air to your vacuum system

WARNING

Do not admit air into the pump through the dipstick assembly or any other port until the pump has cooled to room temperature. AP201 fluid has a low auto-ignition temperature and can catch fire if air is admitted. Also, if the pump is hot, expansion of the admitted air may cause hot pump fluid to be ejected through the dipstick assembly or other open port.

1. Close the baffle-valve and ensure the backing valve is open.
2. Open the chamber air-admittance valve.

4.5 Re-evacuation of your vacuum system

1 Close the chamber air-admittance valve and any other openings to atmosphere.

Close the backing valve, then open the roughing valve.

3. When a system pressure of 1 or 2 mbar (1×10^2 or 2×10^2 Pa) or lower is reached, open the backing valve.
4. Slowly open the baffle-valve; if you open the baffle-valve too quickly, you can stall the vapour booster pump.

4.6 Pump shut-down

WARNING

Do not admit air into the pump through the dipstick assembly or any other port until the pump has cooled to room temperature. AP201 fluid has a low auto-ignition temperature and can catch fire if air is admitted. Also, if the pump is hot, expansion of the admitted air may cause hot pump fluid to be ejected through the dipstick assembly or other open port.

The following method of shut-down of the system ensures that the vapour booster pump is left evacuated and so prevents the absorbtion of air by the pump fluid. When you subsequently start up, evacuate the system through the roughing pipeline to a pressure of 1 or 2 mbar (1×10^2 or 2×10^2 Pa) or lower before you switch on the vapour booster pump.

1. Close the baffle-valve. Switch off the vapour booster pump heater and allow the pump to cool. If you do not allow the pump to cool before you admit air, on re-evacuation the pump fluid will superheat and evolve vapour which will pass into the backing pipeline.

   Close the backing valve.

3. Open the backing pump air-admittance valve, then switch off the backing pump. Do not switch off the backing pump unless air is admitted to the vapour booster pump, or backing pump oil may be drawn into the backing pipeline.
4. Wait until the pump-boiler has cooled to 100 °C, then turn off the cooling-water supply.

5 MAINTENANCE

5.1 Safety

WARNING

Obey the safety instructions given below and take note of appropriate precautions. If you do not, you can cause injury to people and damage to equipment.

A suitably trained technician must maintain the pump.

Ensure that the maintenance technician is familiar with the safety precautions which relate to the pump fluid and products pumped. Wear the appropriate safety-clothing when you come into contact with contaminated components. Dismantle and clean contaminated components inside a fume-cupboard.

Isolate the pump from the electrical supply and your vacuum system before you start maintenance.

Allow the pump to cool for at least 60 minutes before you touch any part of the pump (including the dipstick) or move it. Open the pump to atmospheric pressure when it is cool.

Do not remove the dipstick or open the drain-plug to vent the pump while the pump is operating or under vacuum.

Use suitable lifting equipment to move the pump.

Do not touch or inhale the thermal breakdown products of fluorinated materials which may be present if the pump has been overheated to 315 °C and above. These breakdown products are very dangerous. Fluorinated materials used in the pump include seals and 'O' rings. The pump may have overheated if it was misused, if it malfunctioned, or if it was in a fire. BOC Edwards Material Safety Data Sheets for fluorinated materials used in the pump are available on request: contact your supplier or BOC Edwards.

Do not touch or inhale the thermal breakdown products of the pump fluid if the pump has been overheated.

Do not use abrasive or reactive chemical substances to clean the pump. Do not use solvents to clean Co-Seals or 'O' rings.

Maintenance plan

The maintenance plan shown in Table 2 details the maintenance operations necessary to maintain the vapour booster pump in normal use. Instructions for each operation are given in the section shown.

More frequent maintenance may be required if corrosive or abrasive gases and vapours have been pumped. If necessary, adjust the maintenance schedule according to your experience.

Operation	Frequency	Refer to Section
Check the pump fluid-level	Weekly	5.3
Inspect the pump fluid (drain if necessary)	As required	5.4
Clean the pump	As required	5.5
Clean the radiation shield	As required	5.6
Replace a heater	As required	5.7
Check the heater clamp-plate and securing nuts	500 hourly	5.8

Table 2 - Maintenance plan

Check the pump fluid-level

WARNING

Do not admit air to the boiler through the dipstick assembly until the pump has cooled to ambient temperature. If you do, hot pump fluid may be ejected through the dipstick hole.

If the pump-boiler operates at a higher than normal temperature, check the level of fluid in the boiler. Use the following procedure.

Allow the pump to cool and open it to atmospheric pressure.

2. Remove the dipstick and the 'O' ring and check the fluid-level. The fluid-level must be visible on the dipstick between the two level marks.

3. If the fluid-level is low, add more fluid as described in Section 3.11.

4. Allow the fluid to drain into the boiler and check the level again. If the level is too high, drain the excess fluid as described in Section 5.4.

5. Inspect the dipstick 'O' ring. Replace the 'O' ring if it is damaged or if thermal set has taken place.

6. Replace the dipstick.

5.4 Drain and inspect the pump fluid

If the pump fails to give satisfactory performance on a leak tight system, inspect the condition of the pump fluid. Use the following procedure.

1. Allow the pump to cool and open it to atmospheric pressure.

2. Switch on the pump heater for a maximum time of two minutes to warm the pump fluid. Do not vaporise the pump fluid.

3. Disconnect the pump from the electrical supplies and detach it from your vacuum system.

4. Visually check the interior of the pump. If it is badly discoloured or coated with charred fluid, the pump fluid has deteriorated and must be changed; continue with the procedure detailed below. If the fluid is in a satisfactory condition, refill the pump as detailed in Section 3.11 and refit it to your vacuum system.

5. Place a suitable container under the drain-connection, open the connection and allow the fluid to drain from the boiler.

6. Inspect and clean the pump as detailed in Section 5.5.

5.5 Clean and inspect the pump

5.5.1 Dismantle the pump (all pumps)

Use the following procedure to dismantle the pump. Figures 1, 2 and 3 show the location of components referenced in brackets in the procedure.

Allow the pump to cool and open it to atmospheric pressure.

2. Drain the pump fluid as described in Section 5.4.

3. Disconnect the cooling-water supply and return pipes, the electrical supply to the heaters and the backing, roughing and system connections.

4. Remove the pump from your vacuum system and remove the inlet-flange seal.

5. Prise back the lagging on the condenser drain-tube (18) at the bottom of the baffle tube assembly (23 or 21), then disconnect the tube.

6. Support the side-cone assembly (20 or 22), remove the retaining screws and detach the side-cone from the T-piece (9 or 7). Unscrew and remove the ejector jet assembly (21 or 23).

Further disassembly details of the 9B3K and 9B4K pumps are given in Section 5.5.2. Further disassembly details of the 18B4A pump are given in Section 5.5.3.

5.5.2 Dismantle the 9B3K and 9B4K

Use the following procedure to further dismantle 9B3K and 9B4K pumps. See Figures 1 and 2 for the location of components referenced in brackets in the procedure.

1. Remove the four screws which secure the guard-ring to the wall of the top-cone (6). Detach the guard-ring (3) and spring (9B4K only).

2. Detach the top-jet cap (4) and the upper vapour-tube assembly (5). On the 9B4K pump only, remove the second-stage vapour-tube. Withdraw the vapour-tubes from the top cone.

3. Support the top-cone then remove the retaining screws and detach the cone from the T-piece.

4. Remove the lower vapour-tube assembly (7).

5. Remove the retaining screws and detach the T-piece (9) from the boiler top-flange.

5.5.3 Dismantle the 18B4A

Use the following procedure to further dismantle 18B4A pumps. See Figure 3 for the location of components referenced in brackets in the procedure.

1 Remove the screws which secure the guard-ring to the wall of the top-cone and remove the guard-ring (2).

2. Support the top-cone, remove the retaining screws, then carefully detach the top-cone from the T-piece (7).

3. Unscrew the top-jet cap (3) from the tie-rod then remove the top and second-stage vapour tubes (25) and (24).

4. Slide the radiation shield which surrounds the two top vapour-tubes upwards over the jet-feed holes at the top of the vapour tube to remove the radiation shield.

5. Detach the lower vapour-tube (5) from the boiler-tube, then detach the T-piece (7) from the boiler top-flange.

Inspect and clean the interior

WARNING

Remove all traces of the cleaning solution before you operate the pump.

When you clean the pump, choose the cleaning solution to suit the type of pump fluid that has been used. The jet assembly can be vapour de-greased if required.

Inspect the pump interior. If there is a solid deposit of pump fluid around the base, do not attempt to remove the deposit mechanically as this is likely to damage the pump; instead, use an ultrasonic cleaning bath to remove the deposit.

2. Wash the interior of the pump and the pump interior components with the selected cleaning solution.

3. Wash again with acetone to remove all traces of the cleaning solution. Bake to 77 °C to remove the acetone. Alternatively, warm air may be passed over the components and the pump interior.

4. Check that all sealing-faces are scratch-free. Refinish surfaces that are scratched.

5. Inspect all of the 'O' rings. Replace any 'O' ring that is damaged or that has undergone thermal set.

Reassemble 9B3K and 9B4K pumps

Note: You must position the guard-ring correctly when you reassemble the pump. If you do not, the pump performance will be reduced.

Use the following procedure to reassemble the pump. Figures 1 and 2 show the locations of components referenced in brackets.

1 Secure the T-piece (9) and Co-Seal (8) to the boiler top-flange with the retaining screws. Tighten the screws by hand only. Do not fully tighten the screws.

2. Screw the ejector-jet assembly (21) onto the sealing washer to ensure a leak-tight joint. Carefully tighten the bottom-flange retaining screws on the T-piece; ensure that the side jet is concentric with the side flange (through which it protrudes).

3. Place the Co-Seal (8) in position, then assemble the side-cone (20) and baffle-tube assembly (23) on the T-piece side flange. Secure with the retaining screws (finger-tight only, do not fully tighten the screws).

4. Reconnect the condenser drain-tube (18) to the baffle assembly. Fully tighten the screws which secure the side-cone to the T-piece flange.

(Continued on page 30)

5. Assemble the lower vapour-tube (7) and sealing washer. Assemble and attach the top-cone (6) and Co-Seal (8) to the T-piece with the retaining screws.

6. Assemble the upper vapour-tube (5) (and the second-stage vapour-tube on the 9B4K pump).

7. Fit the top-jet cap (4) (and spring on the 9B4K pump). Position the guard-ring (3); ensure that the bottom face of the guard-ring is level with the lower face of the jet-cap. Tighten the screws which secure the guard-ring to the wall of the top-cone and recheck the guard-ring position.

8. Fit the inlet-flange 'O' ring (1) and reconnect the cooling-water and electrical supply (see Section 3).

5.5.6 Reassemble 18B4A pumps

Note: You must position the guard-ring correctly when you reassemble the pump. If you do not, the pump performance will be reduced.

Use the following procedure to reassemble the pump. Figure 3 shows the locations of components referenced in brackets.

1. Secure the T-piece (7) and 'O' ring on the boiler-top flange with the retaining screws. Tighten the screws by hand only. Do not fully tighten the screws.

2. Lightly coat the threads of the ejector-jet assembly (23) with anti-seize compound and screw the assembly into the boiler-tube.

3. Check that the T-piece is positioned so that the ejector-jet nozzle is concentric with the side (horizontal) flange of the T-piece, then fully tighten the retaining screws on the lower flange of the T-piece.

4. Position the 'O' ring on the T-piece side flange. Assemble the side-cone (22) and baffle-tube assembly (21) and secure with the retaining screws.

5. Reconnect the condenser drain-tube (18) and 'O' ring to the baffle-tube assembly then fully tighten the retaining screws on the side-cone.

6. Fit the sealing washer (6), attach the lower vapour-tube (5) to the boiler-tube and secure the mounting-flange with the retaining screws.

7 Replace the radiation shields, assemble the second-stage vapour-tube (24) and the top vapour-tube (25), then screw the top-jet cap (3) onto the tie-rod.

8. Position the 'O' ring on the top flange of the T-piece, carefully assemble the top-cone assembly (4) and secure it with the retaining screws and nuts.

9. Place the guard-ring (2) in position and secure it to the lugs on the pump wall with the retaining screws. When you use BOC Edwards AP201 pump fluid, make sure that the location pin (27) on the top of the top-jet protrudes through the cooled-cap (28) by 5 mm. When you use BOC Edwards DC 704 EU fluid, the location pin (27) must be flush with the top of the cooled-cap (28). Slacken and re-tighten the retaining screws as necessary to obtain this setting. Refer to the inset in Figure 3.

10. Fit the inlet-flange 'O' ring seal (1) and reconnect the cooling-water and electrical supply (see Section 3).

5.6 Clean the radiation shield

Keep the radiation shield which surrounds the pump-boiler clean to maintain thermal efficiency.

To clean the external surface of the radiation shield, isolate the pump from the electrical supply and allow the pump to cool for at least 60 minutes. Use a soft cloth (and a suitable cleaning solution if necessary) to wipe the radiation shield.

If you then need to clean the internal surface of the radiation shield, you must remove it from the pump. Clean the radiation shield as described above and replace it on the pump.

5.7 Replace the pump heaters

WARNING

All electrical installation and maintenance work must be carried out by a competent electrician.

Note: When you replace the heater elements, we recommend that you check the condition and level of the pump fluid, as described in Sections 5.3 and 5.4.

5.7.1 9B3K and 9B4K pumps

Use the following procedure to replace the pump heaters. Figures 1 and 2 show the locations of the components referenced in brackets.

1. Isolate the pump from the electrical supply.

2. Remove the retaining screws from the terminal-box cover, detach the cover and disconnect the electrical supply leads from the terminals. If thermal snap-switches are fitted, the switch leads must also be disconnected from the terminal-block.

3. Remove the pump from the vacuum system and switch off and disconnect the cooling-water supply.

4. Use suitable lifting-gear to tilt the pump onto its side.

(Continued on page 32)

5. Unscrew the heater retaining nut (12) underneath the boiler, then detach the complete heater assembly (the radiation shield (13), clamp-plate (14) and heater element (15)).

6. Disconnect the heater element wires from the terminal-block (11) and remove the defective heater element(s).

7. Remove any hard scale deposits or corrosion on the base of the pump.

8. Fit the replacement heater. Make sure that the heater voltage and wattage correspond with that specified on the pump data plate. Also make sure that the heater terminals are positioned centrally in the clearance holes in the clamp-plates (14) on reassembly.

9. Reconnect the heater element wires to the terminal-block (11). Ensure that the ceramic beads and nickel wire are in good condition. Replace if necessary. If you replace the wire you must use pure nickel wire.

10. Lightly coat the threads of the heater mounting-stud with a high-temperature anti-seize compound before you fit the heater retaining nut.

11. Reassemble the heater (15), clamp-plate (14) and radiation shield (13) underneath the pump-boiler and secure in place with the heater retaining nut (12). Do not overtighten the retaining nut.

12. Do an electrical continuity check to make sure that the new heater assembly has been installed correctly.

13. Use suitable lifting-gear to turn the pump to the upright (vertical) position. Re-install the pump into the vacuum system and reconnect the cooling-water supply (see Section 3).

14. If necessary, reconnect the thermal snap-switch leads to the terminal-block, then connect the electrical supply leads to the terminal-box.

15. With the pump still isolated from the electrical supply, do an insulation resistance check to ensure that there is no abnormal leakage to earth.

16. Check the pump fluid level and condition. If satisfactory, you can switch on and use the pump.

5.7.2 18B4A pumps

Notes: Refer to Figure 15. The terminal block cover (1) is secured to the boiler base (2).

Before you can remove the terminal block cover (for instance, when you replace the heaters as described below), you must remove the nuts and washers which secure the terminal block cover to the boiler base.

When you refit the terminal block cover:

Ensure that the earth (ground) connections are correctly fitted as described in Section 3.8.

Refit the nuts and washers to secure the cover to the boiler base.

Use the following procedure to replace the pump heaters. Figure 3 shows the locations of the components referenced in brackets.

1. Isolate the pump from the electrical supply.

2. Remove the retaining screws from the terminal-box cover, detach the cover and disconnect the electrical supply leads from the terminals. If thermal snap-switches are fitted, the switch leads must also be disconnected from the terminal-block.

3. Remove the pump from the vacuum system, switch off and disconnect the cooling-water supply.

4. Place a support under the heater assembly and terminal-box (the assembly has a mass of over 10 kg). Remove the three nuts (12) and washers which retain the heater assembly. Carefully remove the half nuts and washers which retain the perforated plate.

5. Remove the heaters, spacers, washers, perforated plate and terminal-box (16). Make sure that you do not damage the wires from the heater to the terminal-box.

6. Do an electrical continuity check on each heater electrical circuit to identify the defective heater. Disconnect the defective heater from the terminal-block inside the terminal-box (16): see Section 3.8.

7 Remove any hard scale deposits or corrosion on the base of the pump.

8. Fit the replacement heater. Make sure that the heater voltage and wattage correspond with that specified on the pump data plate. Also make sure that the heater terminals are positioned centrally in the clearance holes in the clamp-plates (13) on reassembly.

9. Reconnect the electrical leads to the heater (see Section 3.8) and secure the terminal-block nuts. Ensure that the ceramic beads and nickel wire are in good condition. Replace if necessary. If you replace the wire you must use pure nickel wire.

10. Lightly coat the threads of the heater mounting-stud with a high-temperature anti-seize compound before you fit the heater retaining nut.

(Continued on page 34)

11. Place the heater assemblies, terminal-box, spacers, washers, perforated plate and half-nuts and washers in the correct position. Tighten the half-nuts to a torque of 20 Nm. Do not over-tighten the clamp-plate securing nut.

12. Do an electrical continuity check to make sure that the new heater assembly has been installed correctly. Do an electrical continuity check on the other two heaters to ensure that they have not been damaged.

13. Replace the three retaining nuts and washers.

14. If necessary, reconnect the thermal snap-switch leads to the terminal-block, then connect the electrical supply leads to the terminal-box.

15. With the pump still isolated from the electrical supply, do an insulation resistance check to ensure that there is no abnormal leakage to earth. Make sure that the terminal-box earth connection is secure.

16. Check the pump fluid level and condition. If satisfactory, you can switch on and use the pump.

5.8 Check the heater clamp-plate and retaining nuts

If the pump is regularly heated up and cooled down, frequently check the tightness of 9B3K/9B4K pump heater clamp-plate and 18B4A heater retaining nuts.

Do the checks 200 working hours after heater replacement and every 500 working hours thereafter. Retighten the clamp-plate or retaining nuts as necessary.

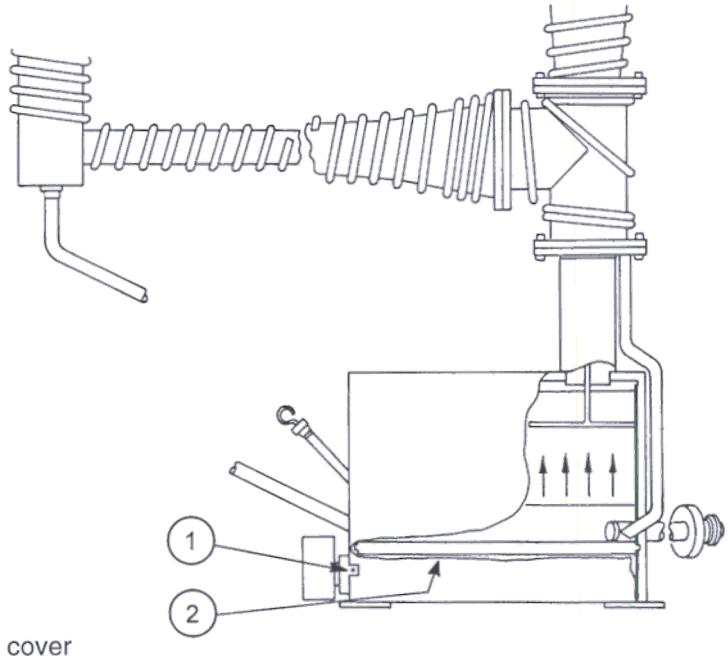

1. Terminal block cover
2. Boiler base

Figure 15 - Locations of the 18B4A radiation shield rear cover and the terminal block cover

6 STORAGE AND DISPOSAL

6.1 Storage

Use the following procedure to store the pump.

1 Shut down the pump as described in Section 4.6.

2. Isolate the pump from the electrical supply and disconnect it from your vacuum system. Drain the pump fluid as described in Section 5.4.

3. Dismantle, clean and reassemble the pump as described in Section 5.5. Do not refill the pump with fluid.

4. Place protective covers over the inlet and backing condenser flanges and the cooling-water connections.

5. Store the pump in cool dry conditions until required for use. When required, prepare and install the pump as described in Section 3.

6.2 Disposal

Dispose of the pump and any components removed from it safely in accordance with all local and national safety and environmental requirements.

Take particular care with the following:

Components which have come into contact with pump fluid

Fluoroelastomers which may have been subjected to temperatures above 315 ^{o}C (see Section 5.1)

Components which have been contaminated with dangerous process substances.

7 SERVICE, SPARES AND ACCESSORIES

7.1 Introduction

BOC Edwards products, spares and accessories are available from BOC Edwards companies in Belgium, Brazil, China, France, Germany, Israel, Italy, Japan, Korea, Singapore, United Kingdom, U.S.A, and a world-wide network of distributors. The majority of these centres employ Service Engineers who have undergone comprehensive BOC Edwards training courses.

Order spare parts and accessories from your nearest BOC Edwards company or distributor. When you order, please state for each part required:

Model and Item Number of your equipment

Serial number (if any)

Item Number and description of part.

7.2 Service

BOC Edwards products are supported by a world-wide network of BOC Edwards Service Centres. Each Service Centre offers a wide range of options including: equipment decontamination; service exchange; repair; rebuild and testing to factory specifications. Equipment which has been serviced, repaired or rebuilt is returned with a full warranty.

Your local Service Centre can also provide BOC Edwards engineers to support on-site maintenance, service or repair of your equipment.

For more information about service options, contact your nearest Service Centre or other BOC Edwards company.

7.3 Spares

7.3.1 Pump fluid

Product	Item Number
DC704EU (25 kg)	H112-01-045
Apiezon AP201 (4 l)	H026-01-054
Apiezon AP201 (20 l)	H026-01-052

9B3K spares

Product			Item Number
Heaters*	0.85 kW	110-125 V	H017-00-140
		210-225 V	H017-00-134
		230-250 V	H017-00-137
	1.40 kW	110-125 V	H017-00-161
		210-225 V	H017-00-155
		230-250 V	H017-00-158
Pump inlet-flange 'O' ring VIT 0448A			H021-06-092
Backing connection 'O' ring (pack of 5) VIT 0340			H021-06-055
Drain-plug 'O' ring VIT 1121			H021-06-121

One heater of each wattage is required.

9B4K spares

Product			Item Number
Heaters*	0.85 kW	110-125 V	H017-00-140
		210-225 V	H017-00-134
		230-250 V	H017-00-137
	1.40 kW	110-125 V	H017-00-161
		210-225 V	H017-00-155
		230-250 V	H017-00-158
Pump inlet-flange 'O' ring VIT 0448A			H021-06-092
Backing connection 'O' ring (pack of 5) VIT 0340			H021-06-055
Drain-plug 'O' ring VIT 1121			H021-06-121

* One heater of each wattage is required.

7.3.4 18B4A spares

Product	Item Number
Pump inlet-flange VIT 0454	H021-06-099
Backing connection VIT 1159	H021-06-159
Drain-plug 'O' ring VIT 0216	H021-06-026
Dipstick 'O' ring VIT 1121	H021-06-121

Heaters *

Pump	Pump voltage	Nominal voltage †	Heater code	Spares pack
B065-03-200	200-210 V	200 V	H017-08-012	H017-08-015
B065-03-220	220-230 V	220 V	H017-08-006	H017-08-009
B065-03-380	380-400 V	220 V	H017-08-006	H017-08-009
B065-03-240	240-250 V	240 V	H017-08-005	H017-08-008
B065-03-440	415-440 V	240 V	H017-08-005	H017-08-008
B065-03-480	460-480 V	277 V	H017-08-014	H017-08-017

Heater retrofit kit ▲ B065-99-840

* Three heaters are required.

† As marked on the heaters.

▲ A heater retrofit kit is required when you first replace the heaters in 18B4A pumps with serial numbers as follows:

Pump	Pump voltage	Heater retrofit kit required for pumps with:
B065-03-220	220-230 V	serial number < 12782
B065-03-240	240-250 V	serial number < 11496
B065-03-380	380-400 V	serial number < 12782
B065-03-440	415-440 V	serial number < 11496

7.4 Accessories

9B3K accessories

Product	Item Number
BOC Edwards P12R8 pneumatically-operated baffle and isolation-valve	B018-06-000
Cooling-fail thermal snap-switch	B023-01-000

9B4K accessories

Product	Item Number
BOC Edwards P12R12A pneumatically-operated version	B046-05-000
Cooling-fail thermal snap-switch	B023-02-000

18B4A accessories

Product	Item Number
BOC Edwards P12R12A pneumatically-operated version	B046-05-000
Adaptor flange for baffle and isolation-valve	B046-05-078
Cooling-fail thermal snap-switch	B023-02-000
Boiler protection thermal snap-switch	B064-01-113

(This page deliberately left blank)

Return of BOC Edwards Equipment - Procedure (Form HS1)

Introduction

Before you return your equipment you must warn your supplier if the substances you used (and produced) in the equipment can be dangerous. You must do this to comply with health and safety at work laws.

You must complete the Declaration (HS2) on the next page and send it to your supplier before you dispatch the equipment. If you do not, your supplier will assume that the equipment is dangerous and he will refuse to accept it. If the Declaration is not completed correctly, there may be a delay in processing your equipment.

Guidelines

Take note of the following guidelines:

- Your equipment is '**uncontaminated**' if it has not been used or if it has only been used with substances that are not dangerous. Your equipment is '**contaminated**' if it has been used with any dangerous substances.
- If your equipment has been used with radioactive substances, you must decontaminate it before you return it to your supplier. You must send independent proof of decontamination (for example a certificate of analysis) to your supplier with the Declaration (HS2). Phone your supplier for advice.
- We recommend that contaminated equipment is transported in vehicles where the driver does not share the same air space as the equipment.

PROCEDURE

Use the following procedure:

1. Contact your supplier and obtain a Return Authorisation Number for your equipment.
2. Turn to the next page(s), photocopy and then complete the Declaration (HS2).
3. Remove all traces of dangerous gases: pass an inert gas through the equipment and any accessories which will be returned to your supplier. Drain all fluids and lubricants from the equipment and its accessories.
4. Disconnect all accessories from the equipment. Safely dispose of the filter elements from any oil mist filters.
5. Seal up all of the equipment's inlets and outlets (including those where accessories were attached). You may seal the inlets and outlets with blanking flanges or heavy gauge PVC tape.
6. Seal contaminated equipment in a thick polythene bag. If you do not have a polythene bag large enough to contain the equipment, you can use a thick polythene sheet.
7. If the equipment is large, strap the equipment and its accessories to a wooden pallet. Preferably, the pallet should be no larger than 510mm x 915mm (20" x 35"); contact your supplier if you cannot meet this requirement.
8. If the equipment is too small to be strapped to a pallet, pack it in a suitable strong box.
9. If the equipment is contaminated, label the pallet (or box) in accordance with laws covering the transport of dangerous substances.
10. Fax or post a copy of the Declaration (HS2) to your supplier. The Declaration must arrive before the equipment.
11. Give a copy of the Declaration to the carrier. You must tell the carrier if the equipment is contaminated.
12. Seal the original Declaration in a suitable envelope; attach the envelope securely to the outside of the equipment package. **WRITE YOUR RETURN AUTHORISATION NUMBER CLEARLY ON THE OUTSIDE OF THE ENVELOPE OR ON THE OUTSIDE OF THE EQUIPMENT PACKAGE.**

900-70-000 Issue F 3A05010

BOC EDWARDS

Return of BOC Edwards Equipment - Declaration (Form HS2)

Return Authorisation Number:

You must:

- Know about all of the substances which have been used and produced in the equipment before you complete this Declaration
- Read the Procedure (HS1) on the previous page before you attempt to complete this Declaration
- Contact your supplier to obtain a Return Authorisation Number and to obtain advice if you have any questions
- Send this form to your supplier before you return your equipment

SECTION 1 : EQUIPMENT

Equipment model _____

Serial Number _____

Has the equipment been used, tested or operated?

yes ❑ Go to Section 2 no ❑ Go to Section 4

FOR SEMICONDUCTOR APPLICATIONS ONLY :

Tool Reference Number _____

Process _____

Failure Date _____

Serial Number of Replacement Equipment _____

SECTION 2 : SUBSTANCES IN CONTACT WITH THE EQUIPMENT

Are any of the substances used or produced in the equipment

- Radioactive yes ❑ no ❑
- Biologically active yes ❑ no ❑
- Dangerous to human health and safety? yes ❑ no ❑

If you have answered 'no' to all of these questions, go to Section 4.

Your supplier will not accept delivery of any equipment that is contaminated with radioactive substances, unless you:

- Decontaminate the equipment
- Provide proof of decontamination

YOU MUST CONTACT YOUR SUPPLIER FOR ADVICE BEFORE YOU RETURN SUCH EQUIPMENT

SECTION 3 : LIST OF SUBSTANCES IN CONTACT WITH THE EQUIPMENT

Substance name	Chemical symbol	Precautions required (for example, use protective gloves, etc.)	Action required after spillage or human contact
1			
2			
3			
4			
5			
6			

SECTION 4 : RETURN INFORMATION

Reason for return and symptoms of malfunction: _____

_____

If you have a warranty claim:

- who did you buy the equipment from ? _____
- give the supplier's invoice number _____

SECTION 5 : DECLARATION

Print your name: _____ Print your job title: _____

Print your organisation: _____

Print your address: _____

_____

Telephone number: _____ Date of equipment delivery: _____

I have made reasonable enquiry and I have supplied accurate information in this Declaration. I have not withheld any information. I have followed the Return of BOC Edwards Equipment Procedure (HS1) on the previous page.

Signed: _____ Date _____

P900-71-000 Issue F 3A05-010

Addresses

EUROPE

CORPORATE/EUROPE HEADQUARTERS
BOC Edwards
Manor Royal
Crawley
West Sussex, RH10 2LW
Tel: +(44) 1293 528844
Fax: +(44) 1293 533453

UNITED KINGDOM
(ENGLAND)
BOC Edwards
The Priestley Centre
10 Priestley Road
The Surrey Research Park
Guildford
Surrey, GU2 5XY
Tel: +(44) 1483 579857
Fax: +(44) 1483 505211

(SCOTLAND)
BOC Edwards
3 Deerdykes Road
Westfield
Cumbernauld
Strathclyde, G68 9HW
Tel: +(44) 1236 730575

BELGIUM
BOC Edwards
Bergensesteenweg 709
B1600 Sint-Pieters-Leeuw
Brussels
Tel: +(32) 2 363 00 30
Fax: +(32) 2 363 00 64

FRANCE
BOC Edwards
125 Avenue Louis Roche
92238 Gennevilliers cedex
Paris
Tel: +(33) 1 47 98 24 01
Fax: +(33) 1 47 98 44 54

GERMANY
BOC Edwards
Ammerthalstraβe 36
85551 Kirchheim
Munich
Tel: +(49) 89 99 19 18 0
Fax: +(49) 89 99 19 18 99

ITALY
BOC Edwards
Via Carpaccio 35
20090 Trezzano sul Naviglio
Milan
Tel: +(39) 2 48 4471
Fax: +(39) 2 48 401638

ISRAEL
Edwards Israel Vacuum Ltd.
5 Habarzel Blvd
Gat 2000 Industrial Zone
Qiryat Gat 82000
Tel: +(972) 7 681 0633
Fax: +(972) 7 681 0640

ASIA

HEADQUARTERS
BOC Edwards (Asia)
2605 Shun Tak Centre, West Wing
200 Connaught Road Central
Hong Kong S.A.R
Tel: +(852) 2796 9111
Fax: +(852) 2796 9095

CHINA
BOC Gases (Shanghi) Co. Ltd.
1525 Chuanqiao Road
Jinqiao, Pudong
Shanghai 201206
Tel: +(86) 21 5899 0272
Tianjin BOC Industrial Gases
Tel: +(86) 22 2834 1981

TAIWAN, R.O.C.
Edwards Taiwan Limited
No. 434 Chung-hua Road
Toufen Town, Miaoli County
Taiwan 351
Tel: +(886) (0)37 611422
Fax: +(886) (0)37 611401

SOUTH EAST ASIA
BOC Edwards
26 Changi South Street I
Changi South Industrial Estate
Singapore 486773
Tel: +(65) 546 8408
Fax: +(65) 546 8407

KOREA
HEADQUARTERS
Songwon Edwards Ltd
625-7 Upsong-dong
Chunan City
Chungchong Nam-do
Tel: +(82) 417 554 7070
Fax: +(82) 417 554 7300
(SEOUL)
Tel: +(82) 2 501 7070

AMERICAS

USA HEADQUARTERS
BOC Edwards
One Edwards Park
301 Ballardvale Street
Wilmington, MA 01887
Tel: +(1) 978 658 5410
Toll free (USA only): 800 848 9800
Fax: +(1) 978 658 7969

(ARIZONA)
BOC Edwards
Suite 101
1810 West Drake Drive
Tempe, AZ 85283
Tel: +(1) 602 777 7007
Fax: +(1) 602 777 2202

BOC Edwards
1810 West Drake Drive
Phoenix, AZ 85048
Tel: +(1) 602 777 7007
Fax: +(1) 602 777 2244

(CALIFORNIA)
BOC Edwards
3901 Burton Drive
Santa Clara, CA 95054
Tel: +(1) 408 496 1177
Fax: +(1) 408 496 1188

(TEXAS)
BOC Edwards
11701 Stone Hollow Drive
Austin, TX 78758
Tel: +(1) 512 491 6622
Fax: +(1) 512 389 3890

BOC Edwards
1343 Columbia Drive
Richardson, TX 75081
Tel: +(1) 972 669 9386
Fax: +(1) 972 669 8054

BRAZIL
BOC Do Brasil Ltda
Divisão Edwards Alto Vaco
Rua Bernado Wrona 222
02710 São Paulo-SP
Tel: +(55) 11 8580377
Fax: +(55) 11 2652766

JAPAN

HEADQUARTERS
BOC Edwards
Shuwa Shiba Park Building A-3F
2-4-1 Shibakoen, Minato-ku
Tokyo, 105-0011
Tel: +(81) (0) 3 5470 6530
Fax: +(81) (0) 3 5470 6521

(Electronic Gases)
Osaka Sanso Kogyo KK
Tel: +(81) 3 3434 6789
Fax: +(81) 3 5472 8728

(OSAKA)
Esaka Yodo Building 5F
16-34, Enoki-cho
Suita-shi
Osaka 564-0053
Tel: +(81) (0) 6 6384 7052
Fax: +(81) (0) 6 6384 7504

(KYUSHU)
508-1, Yomogi-cho
Kumamoto-shi, 861-5515
Tel: +(81) (0) 96 326 7300
Fax: +(81) (0) 96 326 7302

(SENDAI)
1-37-1, Izumichuo
Izumi-ku
Sendai-shi, 981-3133
Tel: +(81) (0) 22 373 8525
Fax: +(81) (0) 22 373 9636

P900-80-000 Issue A02-060

BOC EDWARDS